VND7030AJ

Double channel high-side driver with MultiSense analog feedback for automotive applications

Datasheet - production data



Features

Max transient supply voltage	V_{CC}	40 V
Operating voltage range	V_{CC}	4 to 28 V
Typ. on-state resistance (per Ch)	R_{ON}	31 mΩ
Current limitation (typ)	I_{LIMH}	56 A
Standby current (max)	I_{STBY}	0.5 µA

- Automotive qualified
- General
  - Double channel smart high-side driver with MultiSense analog feedback
  - Very low standby current
  - Compatible with 3 V and 5 V CMOS outputs
- MultiSense diagnostic functions
  - Multiplexed analog feedback of: load current with high precision proportional current mirror, V_{CC} supply voltage and T_{CHIP} device temperature
  - Overload and short to ground (power limitation) indication
  - Thermal shutdown indication
  - OFF-state open-load detection
  - Output short to V_{CC} detection
  - Sense enable/disable
- Protections
  - Undervoltage shutdown
  - Overvoltage clamp
  - Load current limitation
  - Self limiting of fast thermal transients
  - Configurable latch-off on overtemperature or power limitation with dedicated fault reset pin
  - Loss of ground and loss of V_{CC}
  - Reverse battery with external components
  - Electrostatic discharge protection

Applications

- All types of Automotive resistive, inductive and capacitive loads
- Specially intended for automotive signal lamps (up to 2 x P21W or SAE1156 and R5W paralleled or LED rear combinations)

Description

The device is a double channel high-side driver manufactured using ST proprietary VIPower® M0-7 technology and housed in PowerSSO-16 package. The device is designed to drive 12 V automotive grounded loads through a 3 V and 5 V CMOS-compatible interface, providing protection and diagnostics.

The device integrates advanced protective functions such as load current limitation, overload active management by power limitation and overtemperature shutdown with configurable latch-off.

A $\overline{\text{FaultRST}}$ pin unlatches the output in case of fault or disables the latch-off functionality.

A dedicated multifunction multiplexed analog output pin delivers sophisticated diagnostic functions including high precision proportional load current sense, supply voltage feedback and chip temperature sense, in addition to the detection of overload and short circuit to ground, short to V_{CC} and OFF-state open-load.

A sense enable pin allows OFF-state diagnosis to be disabled during the module low-power mode as well as external sense resistor sharing among similar devices.

This is information on a product in full production.

www.st.com

Contents

1 Block diagram and pin description 5

2 Electrical specification 7

2.1 Absolute maximum ratings 7

2.2 Thermal data 8

2.3 Main electrical characteristics 8

2.4 Waveforms 20

2.5 Electrical characteristics curves 22

3 Protections 26

3.1 Power limitation 26

3.2 Thermal shutdown 26

3.3 Current limitation 26

3.4 Negative voltage clamp 26

4 Application information 27

4.1 GND protection network against reverse battery 27

4.1.1 Diode (DGND) in the ground line 28

4.2 Immunity against transient electrical disturbances 28

4.3 MCU I/Os protection 28

4.4 Multisense - analog current sense 29

4.4.1 Principle of Multisense signal generation 30

4.4.2 TCASE and VCC monitor 32

4.4.3 Short to VCC and OFF-state open-load detection 33

5 Maximum demagnetization energy (VCC = 16 V) 35

6 Package and PCB thermal data 36

6.1 PowerSSO-16 thermal data 36

7 Package information 39

7.1 PowerSSO-16 package information 39

7.2 PowerSSO-16 packing information 41

7.3 PowerSSO-16 marking information 43

8 Order codes 44

9 Revision history 45

List of tables

Table 1: Pin functions 5
Table 2: Suggested connections for unused and not connected pins 6
Table 3: Absolute maximum ratings 7
Table 4: Thermal data 8
Table 5: Power section 8
Table 6: Switching 9
Table 7: Logic inputs 10
Table 8: Protections 11
Table 9: MultiSense 11
Table 10: Truth table 19
Table 11: MultiSense multiplexer addressing 19
Table 12: ISO 7637-2 - electrical transient conduction along supply line 28
Table 13: MultiSense pin levels in off-state 32
Table 14: PCB properties 36
Table 15: Thermal parameters 38
Table 16: PowerSSO-16 mechanical data 39
Table 17: Reel dimensions 41
Table 18: PowerSSO-16 carrier tape dimensions 42
Table 19: Device summary 44
Table 20: Document revision history 45

List of figures

Figure 1: Block diagram 5
Figure 2: Configuration diagram (top view) 6
Figure 3: Current and voltage conventions 7
Figure 4: IOUT/ISENSE versus IOUT 16
Figure 5: Current sense accuracy versus IOUT 16
Figure 6: Switching time and Pulse skew 17
Figure 7: MultiSense timings (current sense mode) 17
Figure 8: Multisense timings (chip temperature and VCC sense mode) 18
Figure 9: TDSTKON 18
Figure 10: Latch functionality - behavior in hard short circuit condition (TAMB << TTSD) 20
Figure 11: Latch functionality - behavior in hard short circuit condition 20
Figure 12: Latch functionality - behavior in hard short circuit condition (autorestart mode + latch off) 21
Figure 13: Standby mode activation 21
Figure 14: Standby state diagram 22
Figure 15: OFF-state output current 22
Figure 16: Standby current 22
Figure 17: IGND(ON) vs. Iout 23
Figure 18: Logic Input high level voltage 23
Figure 19: Logic Input low level voltage 23
Figure 20: High level logic input current 23
Figure 21: Low level logic input current 23
Figure 22: Logic Input hysteresis voltage 23
Figure 23: FaultRST Input clamp voltage 24
Figure 24: Undervoltage shutdown 24
Figure 25: On-state resistance vs. Tcase 24
Figure 26: On-state resistance vs. VCC 24
Figure 27: Turn-on voltage slope 24
Figure 28: Turn-off voltage slope 24
Figure 29: Won vs. Tcase 25
Figure 30: Woff vs. Tcase 25
Figure 31: ILIMH vs. Tcase 25
Figure 32: OFF-state open-load voltage detection threshold 25
Figure 33: Vsense clamp vs. Tcase 25
Figure 34: Vsenseh vs. Tcase 25
Figure 35: Application diagram 27
Figure 36: Simplified internal structure 27
Figure 37: MultiSense and diagnostic – block diagram 29
Figure 38: MultiSense block diagram 30
Figure 39: Analogue HSD – open-load detection in off-state 31
Figure 40: Open-load / short to VCC condition 32
Figure 41: GND voltage shift 33
Figure 42: Maximum turn off current versus inductance 35
Figure 43: PowerSSO-16 on two-layers PCB (2s0p to JEDEC JESD 51-5) 36
Figure 44: PowerSSO-16 on four-layers PCB (2s2p to JEDEC JESD 51-7) 36
Figure 45: Rthj-amb vs PCB copper area in open box free air condition (one channel on) 37
Figure 46: PowerSSO-16 thermal impedance junction ambient single pulse (one channel on) 37
Figure 47: Thermal fitting model of a double-channel HSD in PowerSSO-16 38
Figure 48: PowerSSO-16 package dimensions 39
Figure 49: PowerSSO-16 reel 13" 41
Figure 50: PowerSSO-16 carrier tape 42
Figure 51: PowerSSO-16 schematic drawing of leader and trailer tape 42
Figure 52: PowerSSO-16 marking information 43

1 Block diagram and pin description

Figure 1: Block diagram

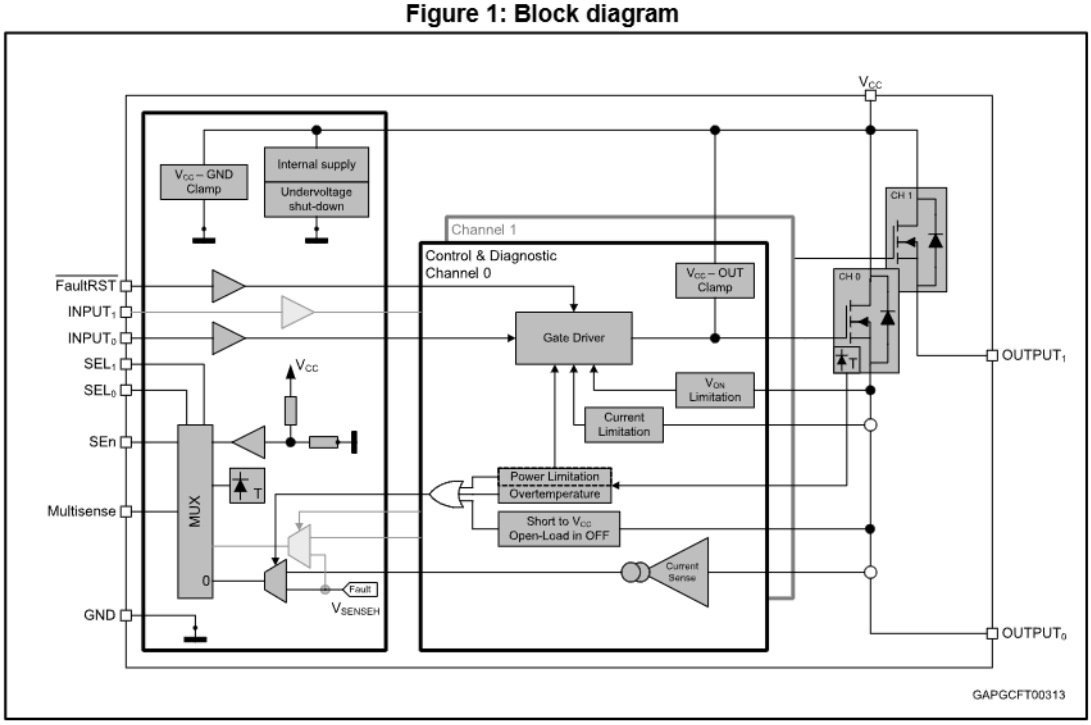

Table 1: Pin functions

Name	Function
V_{CC}	Battery connection.
$OUTPUT_{0,1}$	Power output.
GND	Ground connection. Must be reverse battery protected by an external diode / resistor network.
$INPUT_{0,1}$	Voltage controlled input pin with hysteresis, compatible with 3 V and 5 V CMOS outputs. It controls output switch state.
MultiSense	Multiplexed analog sense output pin; it delivers a current proportional to the selected diagnostic: load current, supply voltage or chip temperature.
SEn	Active high compatible with 3 V and 5 V CMOS outputs pin; it enables the MultiSense diagnostic pin.
$SEL_{0,1}$	Active high compatible with 3 V and 5 V CMOS outputs pin; they address the MultiSense multiplexer.
FaultRST	Active low compatible with 3 V and 5 V CMOS outputs pin; it unlatches the output in case of fault; If kept low, sets the outputs in auto-restart. mode

Figure 2: Configuration diagram (top view)

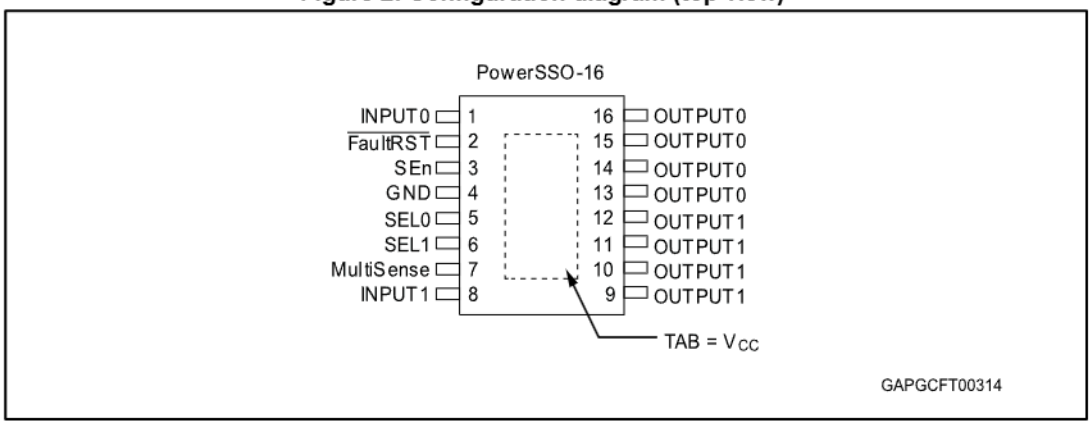

Table 2: Suggested connections for unused and not connected pins

Connection / pin	MultiSense	N.C.	Output	Input	SEn, SELx, $\overline{\text{FaultRST}}$
Floating	Not allowed	X (1)	X	X	X
To ground	Through 1 kΩ resistor	X	Not allowed	Through 15 kΩ resistor	Through 15 kΩ resistor

Notes:

(1)X: do not care.

2 Electrical specification

Figure 3: Current and voltage conventions

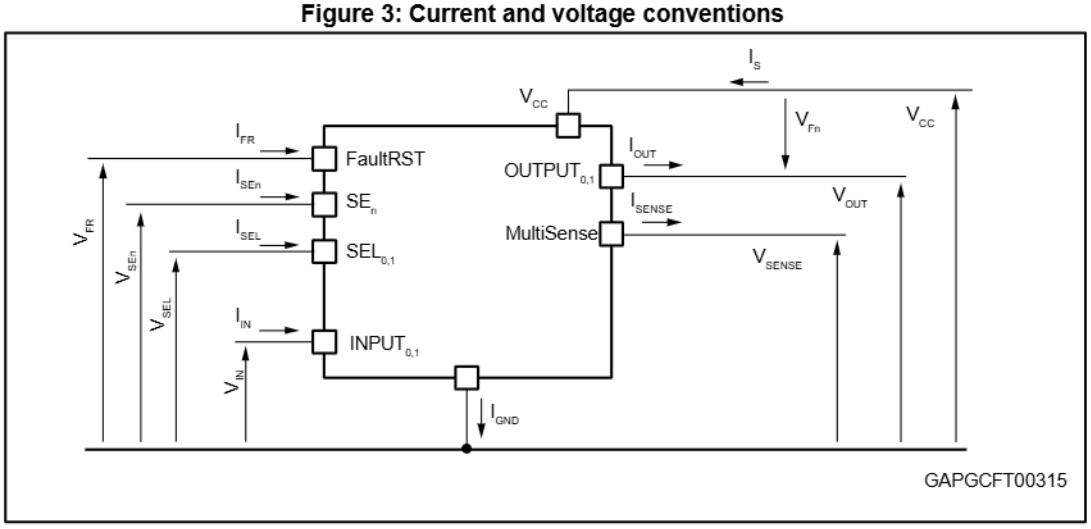

$V_{Fn} = V_{OUTn} - V_{CC}$ during reverse battery condition.

2.1 Absolute maximum ratings

Stressing the device above the rating listed in *Table 3: "Absolute maximum ratings"* may cause permanent damage to the device. These are stress ratings only and operation of the device at these or any other conditions above those indicated in the operating sections of this specification is not implied. Exposure to the conditions in table below for extended periods may affect device reliability.

Table 3: Absolute maximum ratings

Symbol	Parameter	Value	Unit
V_{CC}	DC supply voltage	38	V
$-V_{CC}$	Reverse DC supply voltage	0.3	
V_{CCPK}	Maximum transient supply voltage (ISO 16750-2:2010 Test B clamped to 40V; R_L = 4 Ω)	40	V
V_{CCJS}	Maximum jump start voltage for single pulse short circuit protection	28	V
$-I_{GND}$	DC reverse ground pin current	200	mA
I_{OUT}	$OUTPUT_{0,1}$ DC output current	Internally limited	A
$-I_{OUT}$	Reverse DC output current	29	
I_{IN}	$INPUT_{0,1}$ DC input current	-1 to 10	mA
I_{SEn}	SEn DC input current		
I_{SEL}	$SEL_{0,1}$ DC input current		
I_{FR}	FaultRST DC input current		
V_{FR}	FaultRST DC input voltage	7.5	V

Symbol	Parameter	Value	Unit
I_{SENSE}	MultiSense pin DC output current (V_{GND} = V_{CC} and V_{SENSE} < 0 V)	10	mA
	MultiSense pin DC output current in reverse (V_{CC} < 0 V)	-20	
E_{MAX}	Maximum switching energy (single pulse) (T_{DEMAG} = 0.4 ms; T_{jstart} = 150 °C)	50	mJ
V_{ESD}	Electrostatic discharge (JEDEC 22A-114F) • $INPUT_{0,1}$ • MultiSense • SEn, $SEL_{0,1}$, FaultRST • $OUTPUT_{0,1}$ • V_{CC}	 4000 2000 4000 4000 4000	 V V V V V
V_{ESD}	Charge device model (CDM-AEC-Q100-011)	750	V
T_j	Junction operating temperature	-40 to 150	°C
T_{stg}	Storage temperature	-55 to 150	

2.2 Thermal data

Table 4: Thermal data

Symbol	Parameter	Typ. value	Unit
$R_{thj\text{-}board}$	Thermal resistance junction-board (JEDEC JESD 51-5 / 51-8) (1)(2)	5.3	°C/W
$R_{thj\text{-}amb}$	Thermal resistance junction-ambient (JEDEC JESD 51-5)(1)(3)	57	
$R_{thj\text{-}amb}$	Thermal resistance junction-ambient (JEDEC JESD 51-7)(1)(2)	23	

Notes:

(1)One channel ON.

(2)Device mounted on four-layers 2s2p PCB.

(3)Device mounted on two-layers 2s0p PCB with 2 cm^2 heatsink copper trace.

2.3 Main electrical characteristics

7 V < V_{CC} < 28 V; -40°C < T_j < 150°C, unless otherwise specified.

All typical values refer to V_{CC} = 13 V; T_j = 25°C, unless otherwise specified.

Table 5: Power section

Symbol	Parameter	Test conditions	Min.	Typ.	Max.	Unit
V_{CC}	Operating supply voltage		4	13	28	V
V_{USD}	Undervoltage shutdown				4	V
$V_{USDReset}$	Undervoltage shutdown reset				5	V
$V_{USDhyst}$	Undervoltage shutdown hysteresis			0.3		V
R_{ON}	On-state resistance (1)	I_{OUT} = 3 A; T_j = 25°C		31		mΩ
		I_{OUT} = 3 A; T_j = 150°C			62	
		I_{OUT} = 3 A; V_{CC} = 4 V; T_j = 25°C			45	

Symbol	Parameter	Test conditions	Min.	Typ.	Max.	Unit
V_{clamp}	Clamp voltage	I_S = 20 mA; 25°C < T_j < 150°C	41	46	52	V
		I_S = 20 mA; T_j = -40°C	38			V
I_{STBY}	Supply current in standby at V_{CC} = 13 V (2)	V_{CC} = 13 V; V_{IN} = V_{OUT} = V_{FR} = V_{SEn} = 0 V; $V_{SEL0,1}$ = 0 V; T_j = 25°C			0.5	µA
		V_{CC} = 13 V; V_{IN} = V_{OUT} = V_{FR} = V_{SEn} = 0 V; $V_{SEL0,1}$ = 0 V; T_j = 85°C (3)			0.5	
		V_{CC} = 13 V; V_{IN} = V_{OUT} = V_{FR} = V_{SEn} = 0 V; $V_{SEL0,1}$ = 0 V; T_j = 125°C			3	
t_{D_STBY}	Standby mode blanking time	V_{CC} = 13 V; V_{IN} = V_{OUT} = V_{FR} = $V_{SEL0,1}$ = 0 V; V_{SEn} = 5 V to 0 V	60	300	550	µs
$I_{S(ON)}$	Supply current	V_{CC} = 13 V; V_{SEn} = V_{FR} = $V_{SEL0,1}$ = 0 V; V_{IN0} = 5 V; V_{IN1} = 5 V; I_{OUT0} = 0 A; I_{OUT1} = 0 A		5	8	mA
$I_{GND(ON)}$	Control stage current consumption in ON state. All channels active.	V_{CC} = 13 V; V_{SEn} = 5 V; V_{FR} = $V_{SEL0,1}$ = 0 V; V_{IN0} = 5 V; V_{IN1} = 5 V; I_{OUT0} = 3 A; I_{OUT1} = 3 A			12	mA
$I_{L(off)}$	Off-state output current at V_{CC} = 13 V (1)	V_{IN} = V_{OUT} = 0 V; V_{CC} = 13 V; T_j = 25°C	0	0.01	0.5	µA
		V_{IN} = V_{OUT} = 0 V; V_{CC} = 13 V; T_j = 125°C	0		3	
V_F	Output - V_{CC} diode voltage (1)	I_{OUT} = -3 A; T_j = 150°C			0.7	V

Notes:

(1)For each channel

(2)PowerMOS leakage included.

(3)Parameter specified by design; not subject to production test.

Table 6: Switching

V_{CC} = 13 V; -40°C < T_j < 150°C, unless otherwise specified						
Symbol	**Parameter**	**Test conditions**	**Min.**	**Typ.**	**Max.**	**Unit**
$t_{d(on)}$(1)	Turn-on delay time at T_j = 25 °C	R_L = 4.3 Ω	10	60	120	µs
$t_{d(off)}$(1)	Turn-off delay time at T_j = 25 °C		10	40	100	
$(dV_{OUT}/dt)_{on}$(1)	Turn-on voltage slope at T_j = 25 °C	R_L = 4.3 Ω	0.1	0.35	0.7	V/µs
$(dV_{OUT}/dt)_{off}$(1)	Turn-off voltage slope at T_j = 25 °C		0.1	0.33	0.7	
W_{ON}	Switching energy losses at turn-on (t_{won})	R_L = 4.3 Ω	—	0.37	0.50(2)	mJ
W_{OFF}	Switching energy losses at turn-off (t_{woff})	R_L = 4.3 Ω	—	0.37	0.54(2)	mJ
t_{SKEW}(1)	Differential Pulse skew (t_{PHL} - t_{PLH})	R_L = 4.3 Ω	-70	-20	30	µs

Notes:

(1)See *Figure 6: "Switching time and Pulse skew"*.

(2)Parameter guaranteed by design and characterization; not subject to production test.

Table 7: Logic inputs

7 V < V_{CC} < 28 V; -40°C < T_j < 150°C						
Symbol	**Parameter**	**Test conditions**	**Min.**	**Typ.**	**Max.**	**Unit**
$INPUT_{0,1}$ characteristics						
V_{IL}	Input low level voltage				0.9	V
I_{IL}	Low level input current	V_{IN} = 0.9 V	1			µA
V_{IH}	Input high level voltage		2.1			V
I_{IH}	High level input current	V_{IN} = 2.1 V			10	µA
$V_{I(hyst)}$	Input hysteresis voltage		0.2			V
V_{ICL}	Input clamp voltage	I_{IN} = 1 mA	5.3		7.2	V
		I_{IN} = -1 mA		-0.7		
FaultRST characteristics						
V_{FRL}	Input low level voltage				0.9	V
I_{FRL}	Low level input current	V_{IN} = 0.9 V	1			µA
V_{FRH}	Input high level voltage		2.1			V
I_{FRH}	High level input current	V_{IN} = 2.1 V			10	µA
$V_{FR(hyst)}$	Input hysteresis voltage		0.2			V
V_{FRCL}	Input clamp voltage	I_{IN} = 1 mA	5.3		7.5	V
		I_{IN} = -1 mA		-0.7		
$SEL_{0,1}$ characteristics (7 V < V_{CC} < 18 V)						
V_{SELL}	Input low level voltage				0.9	V
I_{SELL}	Low level input current	V_{IN} = 0.9 V	1			µA
V_{SELH}	Input high level voltage		2.1			V
I_{SELH}	High level input current	V_{IN} = 2.1 V			10	µA
$V_{SEL(hyst)}$	Input hysteresis voltage		0.2			V
V_{SELCL}	Input clamp voltage	I_{IN} = 1 mA	5.3		7.2	V
		I_{IN} = -1 mA		-0.7		
SEn characteristics (7 V < V_{CC} < 18 V)						
V_{SEnL}	Input low level voltage				0.9	V
I_{SEnL}	Low level input current	V_{IN} = 0.9 V	1			µA
V_{SEnH}	Input high level voltage		2.1			V
I_{SEnH}	High level input current	V_{IN} = 2.1 V			10	µA
$V_{SEn(hyst)}$	Input hysteresis voltage		0.2			V
V_{SEnCL}	Input clamp voltage	I_{IN} = 1 mA	5.3		7.2	V
		I_{IN} = -1 mA		-0.7		

Table 8: Protections

7 V < V_{CC} < 18 V; -40°C < T_j < 150°C						
Symbol	**Parameter**	**Test conditions**	**Min.**	**Typ.**	**Max.**	**Unit**
I_{LIMH}	DC short circuit current	V_{CC} = 13 V	40	56	80	A
		4 V < V_{CC} < 18 V (1)				
I_{LIML}	Short circuit current during thermal cycling	V_{CC} = 13 V; T_R < T_j < T_{TSD}		17		A
T_{TSD}	Shutdown temperature		150	175	200	°C
T_R	Reset temperature (1)		T_{RS} + 1	T_{RS} + 7		
T_{RS}	Thermal reset of fault diagnostic indication	V_{FR} = 0 V; V_{SEn} = 5 V	135			
T_{HYST}	Thermal hysteresis (T_{TSD} - T_R)(1)			7		
ΔT_{J_SD}	Dynamic temperature	T_j = -40°C; V_{CC} = 13 V		60		K
t_{LATCH_RST}	Fault reset time for output unlatch(1)	V_{FR} = 5 V to 0 V; V_{SEn} = 5 V; • E.g. Ch_0: V_{IN0} = 5 V; V_{SEL0} = 0 V; V_{SEL1} = 0 V	3	10	20	µs
V_{DEMAG}	Turn-off output voltage clamp	I_{OUT} = 2 A; L = 6 mH; T_j = -40°C	V_{CC} - 38			V
		I_{OUT} = 2 A; L = 6 mH; T_j = 25°C to 150°C	V_{CC} - 41	V_{CC} - 46	V_{CC} - 52	V
V_{ON}	Output voltage drop limitation	I_{OUT} = 0.35 A		20		mV

Notes:

(1)Parameter guaranteed by design and characterization; not subject to production test.

Table 9: MultiSense

7 V < V_{CC} < 18 V; -40°C < T_j < 150°C						
Symbol	**Parameter**	**Test conditions**	**Min.**	**Typ.**	**Max.**	**Unit**
V_{SENSE_CL}	MultiSense clamp voltage	V_{SEn} = 0 V; I_{SENSE} = 1 mA	-17		-12	V
		V_{SEn} = 0 V; I_{SENSE} = -1 mA		7		
CurrentSense characteristics						
K_{OL}	I_{OUT}/I_{SENSE}	I_{OUT} = 0.01 A; V_{SENSE} = 0.5 V; V_{SEn} = 5 V	755			
dK_{cal}/K_{cal}(1)(2)	Current sense ratio drift at calibration point	I_{OUT} = 0.01 A to 0.05 A; I_{cal} = 30 mA; V_{SENSE} = 0.5 V; V_{SEn} = 5 V	-30		30	%
K_{LED}	I_{OUT}/I_{SENSE}	I_{OUT} = 0.05 A; V_{SENSE} = 0.5 V; V_{SEn} = 5 V	970	2380	3785	

7 V < V_{CC} < 18 V; -40°C < T_j < 150°C						
Symbol	**Parameter**	**Test conditions**	**Min.**	**Typ.**	**Max.**	**Unit**
dK_{LED}/K_{LED} (1)(2)	Current sense ratio drift	I_{OUT} = 0.05 A; V_{SENSE} = 0.5 V; V_{SEn} = 5 V	-25		25	%
K_0	I_{OUT}/I_{SENSE}	I_{OUT} = 0.35 A; V_{SENSE} = 0.5 V; V_{SEn} = 5 V	1305	2060	2960	
dK_0/K_0 (1)(2)	Current sense ratio drift	I_{OUT} = 0.35 A; V_{SENSE} = 0.5 V; V_{SEn} = 5 V	-20		20	%
K_1	I_{OUT}/I_{SENSE}	I_{OUT} = 0.8 A; V_{SENSE} = 4 V; V_{SEn} = 5 V	1410	1900	2620	
dK_1/K_1 (1)(2)	Current sense ratio drift	I_{OUT} = 0.8 A; V_{SENSE} = 4 V; V_{SEn} = 5 V	-15		15	%
K_2	I_{OUT}/I_{SENSE}	I_{OUT} = 2 A; V_{SENSE} = 4 V; V_{SEn} = 5 V	1590	1885	2205	
dK_2/K_2 (1)(2)	Current sense ratio drift	I_{OUT} = 2 A; V_{SENSE} = 4 V; V_{SEn} = 5 V	-10		10	%
K_3	I_{OUT}/I_{SENSE}	I_{OUT} = 6 A; V_{SENSE} = 4 V; V_{SEn} = 5 V	1745	1885	2020	
dK_3/K_3 (1)(2)	Current sense ratio drift	I_{OUT} = 6 A; V_{SENSE} = 4 V; V_{SEn} = 5 V	-5		5	%
I_{SENSE0}	MultiSense leakage current	MultiSense disabled: V_{SEn} = 0 V	0		0.5	µA
		MultiSense disabled: -1 V < V_{SENSE} < 5 V (1)	-0.5		0.5	
		MultiSense enabled: V_{SEn} = 5 V; All channels ON; I_{OUTX} = 0 A; Ch$_X$ diagnostic selected; • E.g. Ch$_0$: V_{IN0} = 5 V; V_{IN1} = 5 V; V_{SEL0} = 0 V; V_{SEL1} = 0 V; I_{OUT0} = 0 A; I_{OUT1} = 3 A	0		2	
		MultiSense enabled: V_{SEn} = 5 V; Ch$_X$ OFF; Ch$_X$ diagnostic selected: • E.g. Ch$_0$: V_{IN0} = 0 V; V_{IN1} = 5 V; V_{SEL0} = 0 V; V_{SEL1} = 0 V; I_{OUT1} = 3 A	0		2	
V_{OUT_MSD} (1)	Output Voltage for MultiSense shutdown	V_{SEn} = 5 V; R_{SENSE} = 2.7 kΩ; • E.g. Ch$_0$: V_{IN0} = 5 V; V_{SEL0} = 0 V; V_{SEL1} = 0 V; I_{OUT0} = 3 A		5		V
V_{SENSE_SAT}	Multisense saturation voltage	V_{CC} = 7 V; R_{SENSE} = 2.7 kΩ; V_{SEn} = 5 V; V_{IN0} = 5 V; V_{SEL0} = 0 V; V_{SEL1} = 0 V; I_{OUT0} = 9 A; T_j = 150°C	5			V

7 V < V_{CC} < 18 V; -40°C < T_j < 150°C						
Symbol	**Parameter**	**Test conditions**	**Min.**	**Typ.**	**Max.**	**Unit**
I_{SENSE_SAT}(1)	CS saturation current	V_{CC} = 7 V; V_{SENSE} = 4 V; V_{IN0} = 5 V; V_{SEn} = 5 V; V_{SEL0} = 0 V; V_{SEL1} = 0 V; T_j = 150°C	4			mA
I_{OUT_SAT}(1)	Output saturation current	V_{CC} = 7 V; V_{SENSE} = 4 V; V_{IN0} = 5 V; V_{SEn} = 5 V; V_{SEL0} = 0 V; V_{SEL1} = 0 V; T_j = 150°C	8			A
OFF-state diagnostic						
V_{OL}	OFF-state open-load voltage detection threshold	V_{SEn} = 5 V; Ch$_X$ OFF; Ch$_X$ diagnostic selected • E.g: Ch$_0$ V_{IN0} = 0 V; V_{SEL0} = 0 V; V_{SEL1} = 0 V	2	3	4	V
$I_{L(off2)}$	OFF-state output sink current	V_{IN} = 0 V; V_{OUT} = V_{OL}; T_j = -40°C to 125°C	-100		-15	µA
t_{DSTKON}	OFF-state diagnostic delay time from falling edge of INPUT (see *Figure 9: "TDSTKON"*)	V_{SEn} = 5 V; Ch$_X$ ON to OFF transition; Ch$_X$ diagnostic selected • E.g: Ch$_0$ V_{IN0} = 5 V to 0 V; V_{SEL0} = 0 V; V_{SEL1} = 0 V; I_{OUT0} = 0 A; V_{OUT} = 4 V	100	350	700	µs
$t_{D_OL_V}$	Settling time for valid OFF-state open load diagnostic indication from rising edge of SEn	V_{IN0} = 0 V; V_{IN1} = 0 V; V_{FR} = 0 V; V_{SEL0} = 0 V; V_{SEL1} = 0 V; V_{OUT0} = 4 V; V_{SEn} = 0 V to 5 V			60	µs
t_{D_VOL}	OFF-state diagnostic delay time from rising edge of V_{OUT}	V_{SEn} = 5 V; Ch$_X$ OFF; Ch$_X$ diagnostic selected • E.g: Ch$_0$ V_{IN0} = 0 V; V_{SEL0} = 0 V; V_{SEL1} = 0 V; V_{OUT} = 0 V to 4 V		5	30	µs
Chip temperature analog feedback						
V_{SENSE_TC}	MultiSense output voltage proportional to chip temperature	V_{SEn} = 5 V; V_{SEL0} = 0 V; V_{SEL1} = 5 V; $V_{IN0,1}$ = 0 V; R_{SENSE} = 1 kΩ; T_j = -40°C	2.325	2.41	2.495	V
		V_{SEn} = 5 V; V_{SEL0} = 0 V; V_{SEL1} = 5 V; $V_{IN0,1}$ = 0 V; R_{SENSE} = 1 kΩ; T_j = 25°C	1.985	2.07	2.155	V
		V_{SEn} = 5 V; V_{SEL0} = 0 V; V_{SEL1} = 5 V; $V_{IN0,1}$ = 0 V; R_{SENSE} = 1 kΩ; T_j = 125°C	1.435	1.52	1.605	V
dV_{SENSE_TC}/dT	Temperature coefficient	T_j = -40°C to 150°C		-5.5		mV/K
Transfer function		V_{SENSE_TC} (T) = V_{SENSE_TC} (T_0) + dV_{SENSE_TC} / dT * (T - T_0)				

$7\ V < V_{CC} < 18\ V$; $-40°C < T_j < 150°C$						
Symbol	**Parameter**	**Test conditions**	**Min.**	**Typ.**	**Max.**	**Unit**
V_{CC} supply voltage analog feedback						
V_{SENSE_VCC}	MultiSense output voltage proportional to V_{CC} supply voltage	V_{CC} = 13 V; V_{SEn} = 5 V; V_{SEL0} = 5 V; V_{SEL1} = 5 V; $V_{IN0,1}$ = 0 V; R_{SENSE} = 1 kΩ	3.16	3.23	3.3	V
Transfer function (3)		$V_{SENSE_VCC} = V_{CC} / 4$				
Fault diagnostic feedback (see *Table 10: "Truth table"*)						
V_{SENSEH}	MultiSense output voltage in fault condition	V_{CC} = 13 V; R_{SENSE} = 1 kΩ; • E.g: Ch_0 in open load V_{IN0} = 0 V; V_{SEn} = 5 V; V_{SEL0} = 0 V; V_{SEL1} = 0 V; I_{OUT0} = 0 A; V_{OUT} = 4 V	5		6.6	V
I_{SENSEH}	MultiSense output current in fault condition	V_{CC} = 13 V; V_{SENSE} = 5 V	7	20	30	mA
MultiSense timings (current sense mode - see *Figure 7: "MultiSense timings (current sense mode)"*) (4)						
$t_{DSENSE1H}$	Current sense settling time from rising edge of SEn	V_{IN} = 5 V; V_{SEn} = 0 V to 5 V; R_{SENSE} = 1 kΩ; R_L = 4.3 Ω			60	µs
$t_{DSENSE1L}$	Current sense disable delay time from falling edge of SEn	V_{IN} = 5 V; V_{SEn} = 5 V to 0 V; R_{SENSE} = 1 kΩ; R_L = 4.3 Ω		5	20	µs
$t_{DSENSE2H}$	Current sense settling time from rising edge of INPUT	V_{IN} = 0 V to 5 V; V_{SEn} = 5 V; R_{SENSE} = 1 kΩ; R_L = 4.3 Ω		100	250	µs
$\Delta t_{DSENSE2H}$	Current sense settling time from rising edge of I_{OUT} (dynamic response to a step change of I_{OUT})	V_{IN} = 5 V; V_{SEn} = 5 V; R_{SENSE} = 1 kΩ; I_{SENSE} = 90 % of $I_{SENSEMAX}$; R_L = 4.3 Ω			100	µs
$t_{DSENSE2L}$	Current sense turn-off delay time from falling edge of INPUT	V_{IN} = 5 V to 0 V; V_{SEn} = 5 V; R_{SENSE} = 1 kΩ; R_L = 4.3 Ω		50	250	µs
MultiSense timings (chip temperature sense mode - see *Figure 8: "Multisense timings (chip temperature and VCC sense mode)"*) (4)						
$t_{DSENSE3H}$	V_{SENSE_TC} settling time from rising edge of SEn	V_{SEn} = 0 V to 5 V; V_{SEL0} = 0 V; V_{SEL1} = 5 V; R_{SENSE} = 1 kΩ			60	µs
$t_{DSENSE3L}$	V_{SENSE_TC} disable delay time from falling edge of SEn	V_{SEn} = 5 V to 0 V; V_{SEL0} = 0 V; V_{SEL1} = 5 V; R_{SENSE} = 1 kΩ			20	µs
MultiSense timings (V_{CC} voltage sense mode - see *Figure 8: "Multisense timings (chip temperature and VCC sense mode)"*) (4)						
$t_{DSENSE4H}$	V_{SENSE_VCC} settling time from rising edge of SEn	V_{SEn} = 0 V to 5 V; V_{SEL0} = 5 V; V_{SEL1} = 5 V; R_{SENSE} = 1 kΩ			60	µs

7 V < V_{CC} < 18 V; -40°C < T_j < 150°C						
Symbol	**Parameter**	**Test conditions**	**Min.**	**Typ.**	**Max.**	**Unit**
$t_{DSENSE4L}$	V_{SENSE_VCC} disable delay time from falling edge of SEn	V_{SEn} = 5 V to 0 V; V_{SEL0} = 5 V; V_{SEL1} = 5 V; R_{SENSE} = 1 kΩ			20	µs
MultiSense timings (Multiplexer transition times)(4)						
t_{D_XtoY}	MultiSense transition delay from Ch$_X$ to Ch$_Y$	V_{IN0} = 5 V; V_{IN1} = 5 V; V_{SEn} = 5 V; V_{SEL1} = 0 V; V_{SEL0} = 0 V to 5 V; I_{OUT0} = 0 A; I_{OUT1} = 3 A; R_{SENSE} = 1 kΩ			20	µs
t_{D_CStoTC}	MultiSense transition delay from current sense to T_C sense	V_{IN0} = 5 V; V_{SEn} = 5 V; V_{SEL0} = 0 V; V_{SEL1} = 0 V to 5 V; I_{OUT0} = 1.5 A; R_{SENSE} = 1 kΩ			60	µs
t_{D_TCtoCS}	MultiSense transition delay from T_C sense to current sense	V_{IN0} = 5 V; V_{SEn} = 5 V; V_{SEL0} = 0 V; V_{SEL1} = 5 V to 0 V; I_{OUT0} = 1.5 A; R_{SENSE} = 1 kΩ			20	µs
$t_{D_CStoVCC}$	MultiSense transition delay from current sense to V_{CC} sense	V_{IN1} = 5 V; V_{SEn} = 5 V; V_{SEL0} = 5 V; V_{SEL1} = 0 V to 5 V; I_{OUT1} = 1.5A; R_{SENSE} = 1 kΩ			60	µs
$t_{D_VCCtoCS}$	MultiSense transition delay from V_{CC} sense to current sense	V_{IN1} = 5 V; V_{SEn} = 5 V; V_{SEL0} = 5 V; V_{SEL1} = 5 V to 0 V; I_{OUT1} = 1.5 A; R_{SENSE} = 1 kΩ			20	µs
$t_{D_TCtoVCC}$	MultiSense transition delay from T_C sense to V_{CC} sense	V_{CC} = 13 V; T_J = 125°C; V_{SEn} = 5 V; V_{SEL0} = 0 V to 5 V; V_{SEL1} = 5 V; R_{SENSE} = 1 kΩ			20	µs
$t_{D_VCCtoTC}$	MultiSense transition delay from V_{CC} sense to T_C sense	V_{CC} = 13 V; T_J = 125°C; V_{SEn} = 5 V; V_{SEL0} = 5 V to 0 V; V_{SEL1} = 5 V; R_{SENSE} = 1 kΩ			20	µs
$t_{D_CStoVSENSEH}$	MultiSense transition delay from stable current sense on Ch$_X$ to V_{SENSEH} on Ch$_Y$	V_{IN0} = 5 V; V_{IN1} = 0 V; V_{SEn} = 5 V; V_{SEL1} = 0 V; V_{SEL0} = 0 V to 5 V; I_{OUT0} = 3 A; V_{OUT1} = 4 V; R_{SENSE} = 1 kΩ			20	µs

Notes:

(1)Parameter guaranteed by design and characterization; not subject to production test.

(2)All values refer to V_{CC} = 13 V; T_j = 25°C, unless otherwise specified.

(3)V_{CC} sensing and T_C sensing are referred to GND potential.

(4)Transition delays are measured up to +/- 10% of final conditions.

Figure 4: IOUT/ISENSE versus IOUT

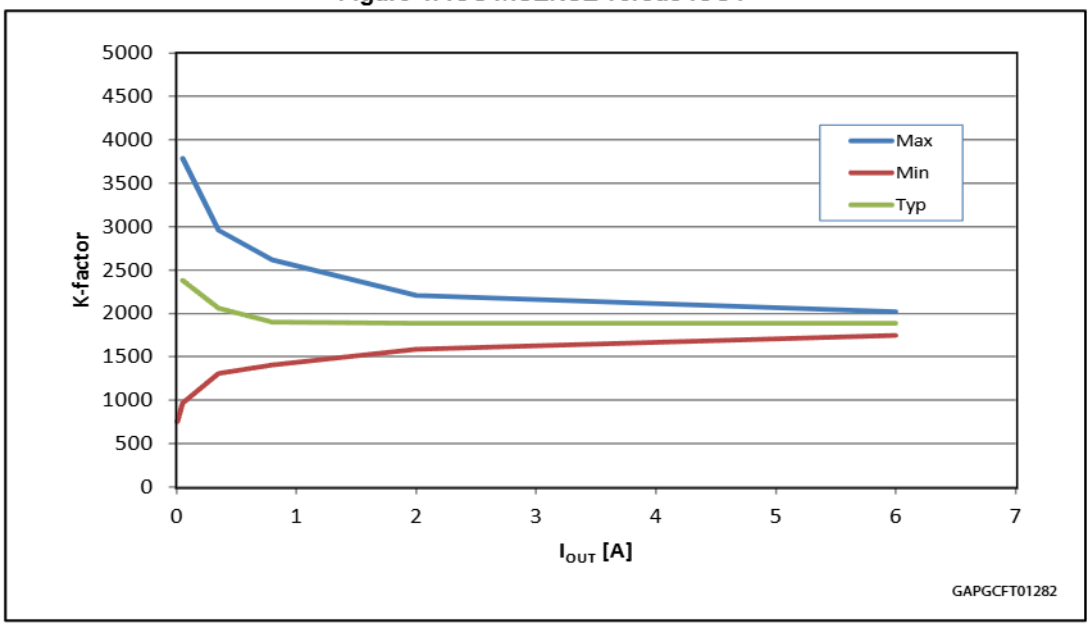

Figure 5: Current sense accuracy versus IOUT

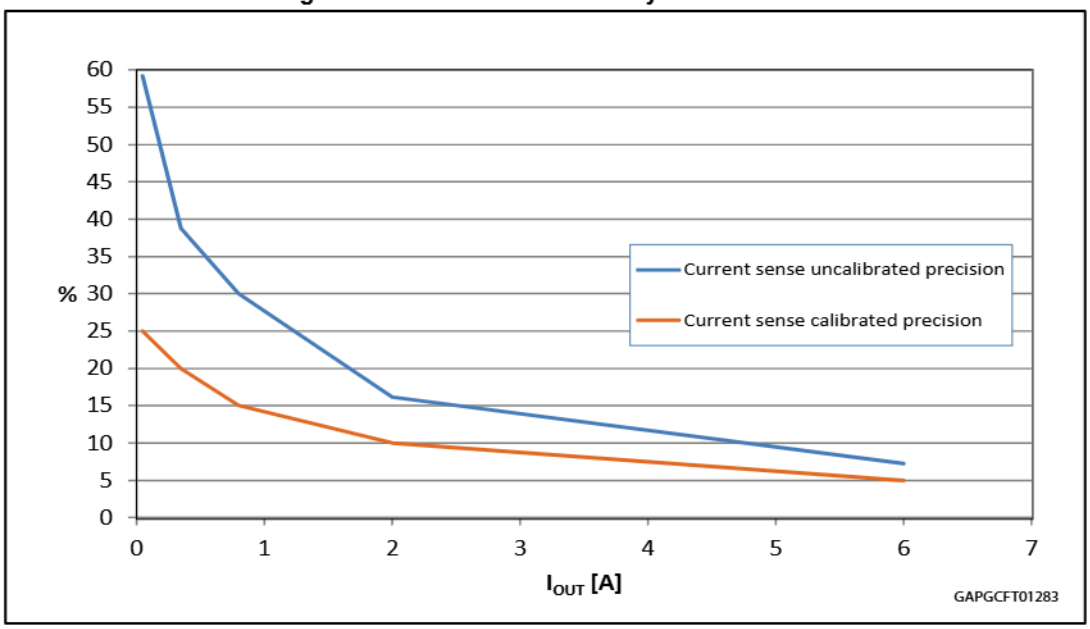

Figure 6: Switching time and Pulse skew

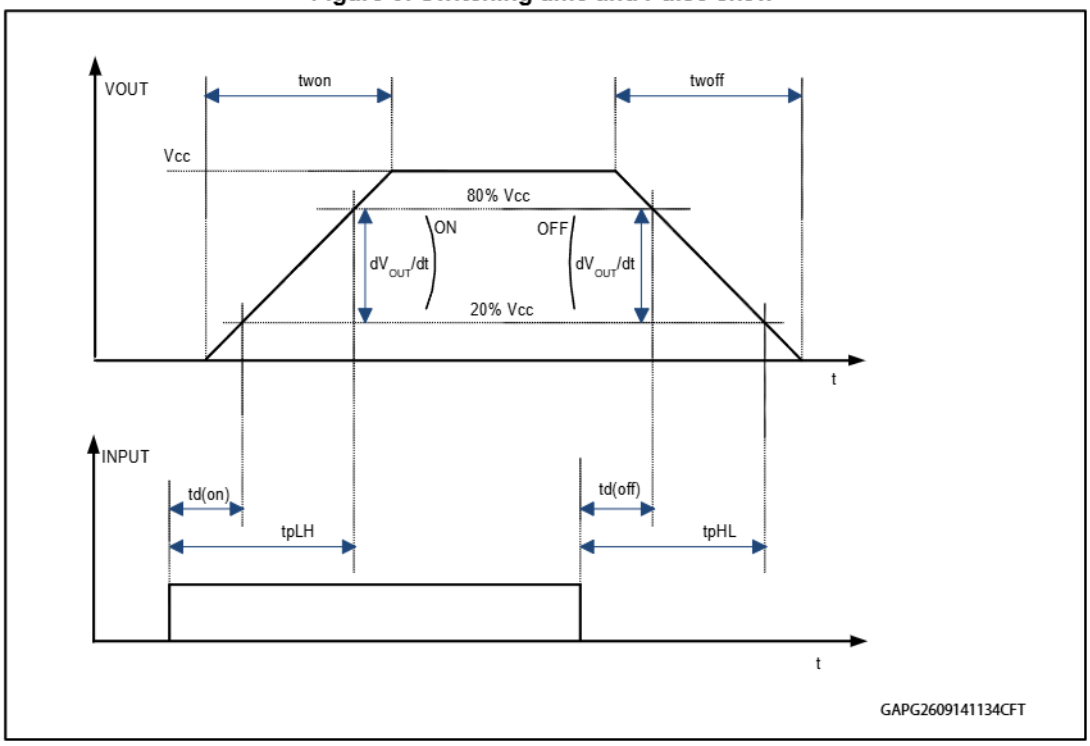

Figure 7: MultiSense timings (current sense mode)

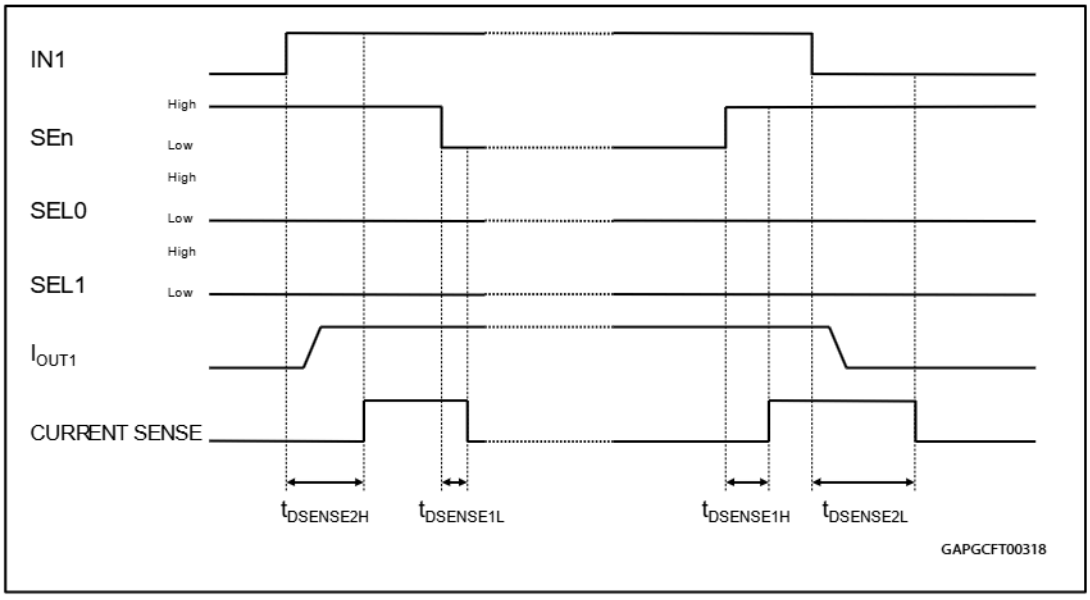

Figure 8: Multisense timings (chip temperature and VCC sense mode)

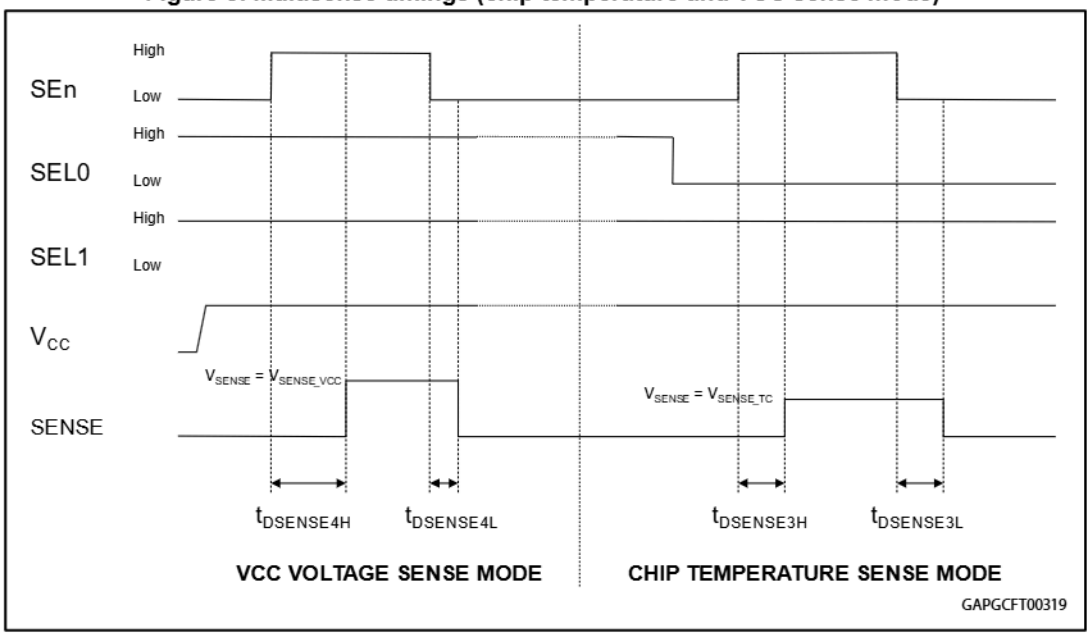

Figure 9: TDSTKON

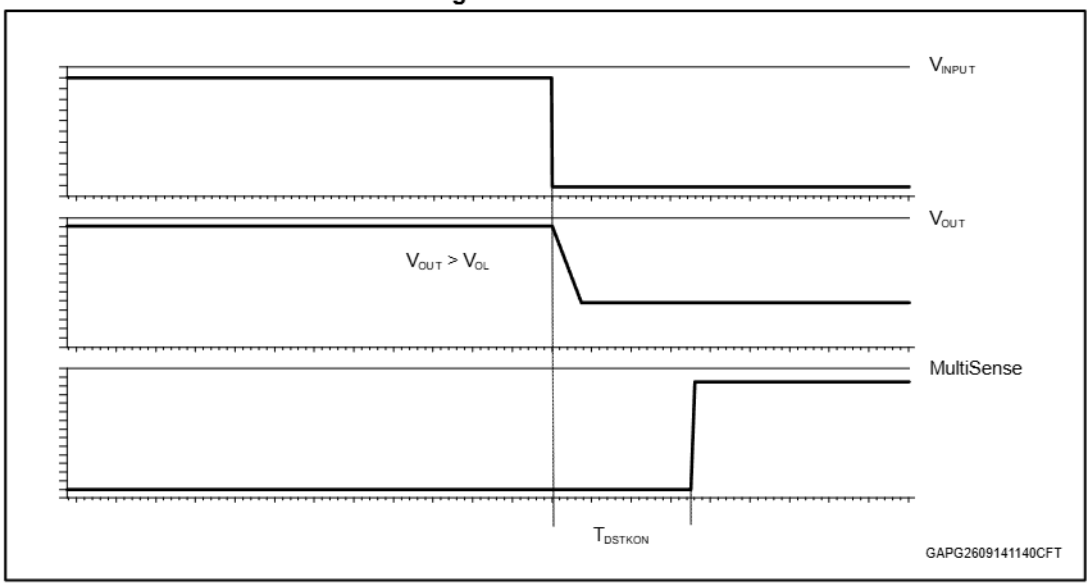

Table 10: Truth table

Mode	Conditions	IN_X	FR	SEn	SEL_X	OUT_X	MultiSense	Comments
Standby	All logic inputs low	L	L	L	L	L	Hi-Z	Low quiescent current consumption
Normal	Nominal load connected; T_j < 150 °C	L	X	See (1)		L	See (1)	
		H	L			H	See (1)	Outputs configured for auto-restart
		H	H			H	See (1)	Outputs configured for Latch-off
Overload	Overload or short to GND causing: $T_j > T_{TSD}$ or $\Delta T_j > \Delta T_{j_SD}$	L	X	See (1)		L	See (1)	
		H	L			H	See (1)	Output cycles with temperature hysteresis
		H	H			L	See (1)	Output latches-off
Undervoltage	$V_{CC} < V_{USD}$ (falling)	X	X	X	X	L L	Hi-Z Hi-Z	Re-start when $V_{CC} > V_{USD} + V_{USDhyst}$ (rising)
OFF-state diagnostics	Short to V_{CC}	L	X	See (1)		H	See (1)	
	Open-load	L	X			H	See (1)	External pull-up
Negative output voltage	Inductive loads turn-off	L	X	See (1)		< 0 V	See (1)	

Notes:

(1)Refer to *Table 11: "MultiSense multiplexer addressing"*

Table 11: MultiSense multiplexer addressing

SEn	SEL_1	SEL_0	MUX channel	MultiSense output			
				Nomal mode	Overload	OFF-state diag. (1)(2)(3)	Negative output
L	X	X		Hi-Z			
H	L	L	Channel 0 diagnostic	I_{SENSE} = 1/K * I_{OUT0}	V_{SENSE} = V_{SENSEH}	V_{SENSE} = V_{SENSEH}	Hi-Z
H	L	H	Channel 1 diagnostic	I_{SENSE} = 1/K * I_{OUT1}	V_{SENSE} = V_{SENSEH}	V_{SENSE} = V_{SENSEH}	Hi-Z
H	H	L	T_{CHIP} Sense	$V_{SENSE} = V_{SENSE_TC}$			
H	H	H	V_{CC} Sense	$V_{SENSE} = V_{SENSE_VCC}$			

Notes:

(1)Example 2: FR = 1; IN_0 = 0; OUT_0 = latched, $V_{OUT0} > V_{OL}$; MUX channel = channel 0 diagnostic; Mutisense = V_{SENSEH}

(2)Example 1: FR = 1; IN_0 = 0; OUT_0 = L (latched); MUX channel = channel 0 diagnostic; Mutisense = 0

(3)In case the output channel corresponding to the selected MUX channel is latched off while the relevant input is low, Multisense pin delivers feedback according to OFF-State diagnostic.

2.4 Waveforms

Figure 10: Latch functionality - behavior in hard short circuit condition (TAMB << TTSD)

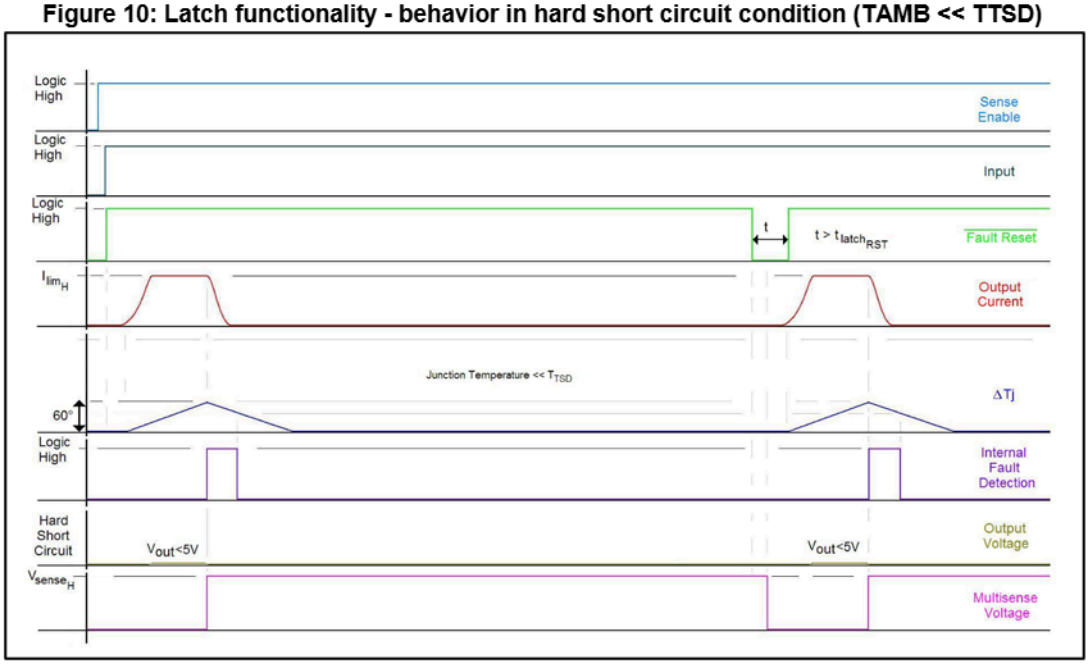

Figure 11: Latch functionality - behavior in hard short circuit condition

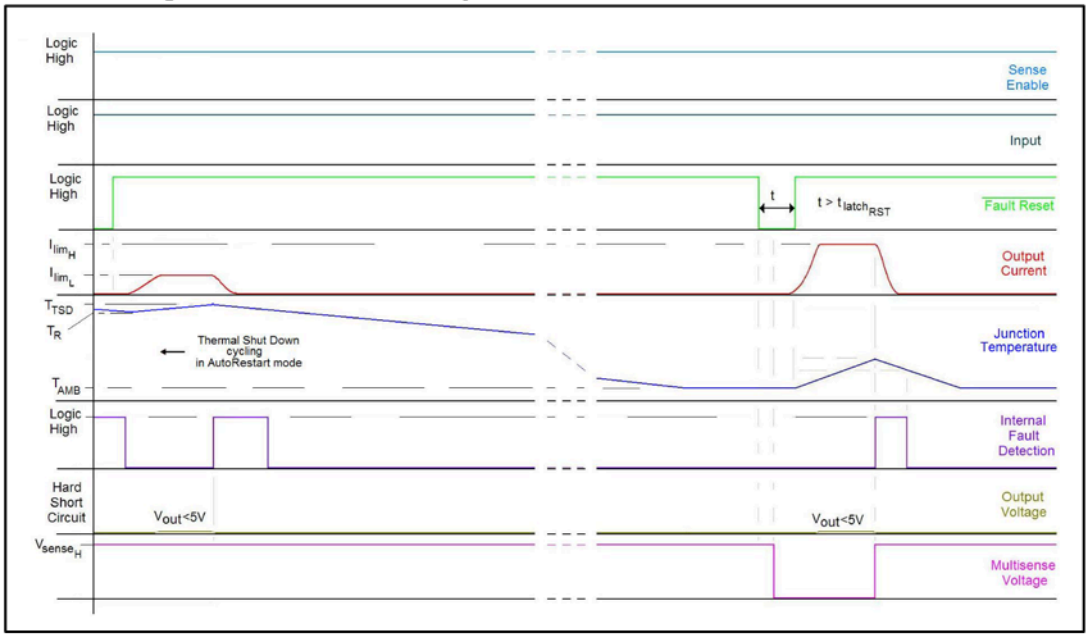

Figure 12: Latch functionality - behavior in hard short circuit condition (autorestart mode + latch off)

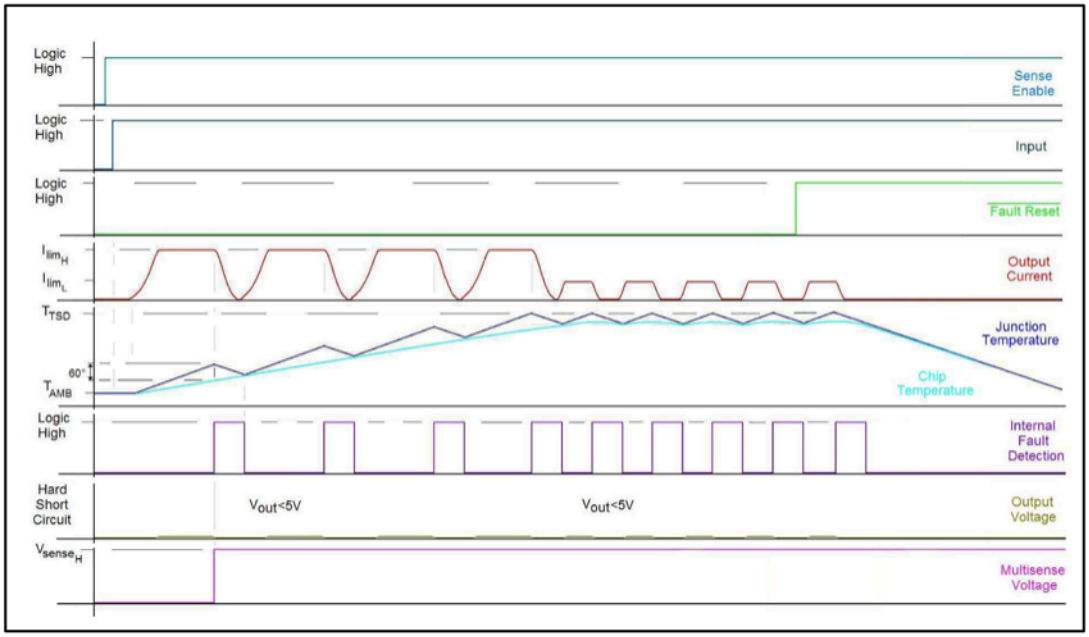

Figure 13: Standby mode activation

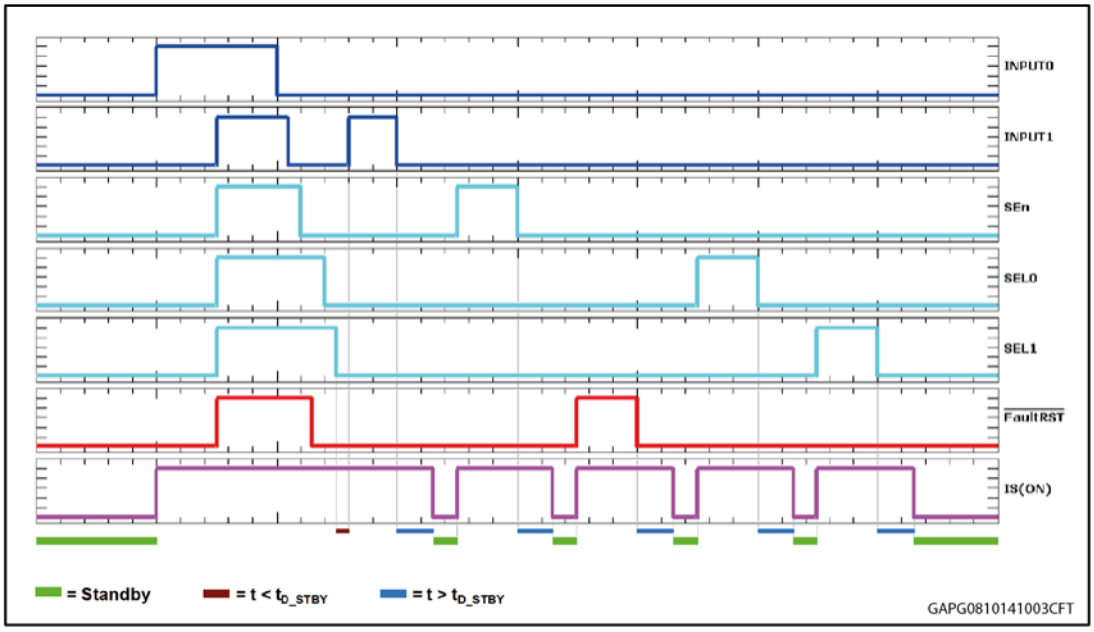

Figure 14: Standby state diagram

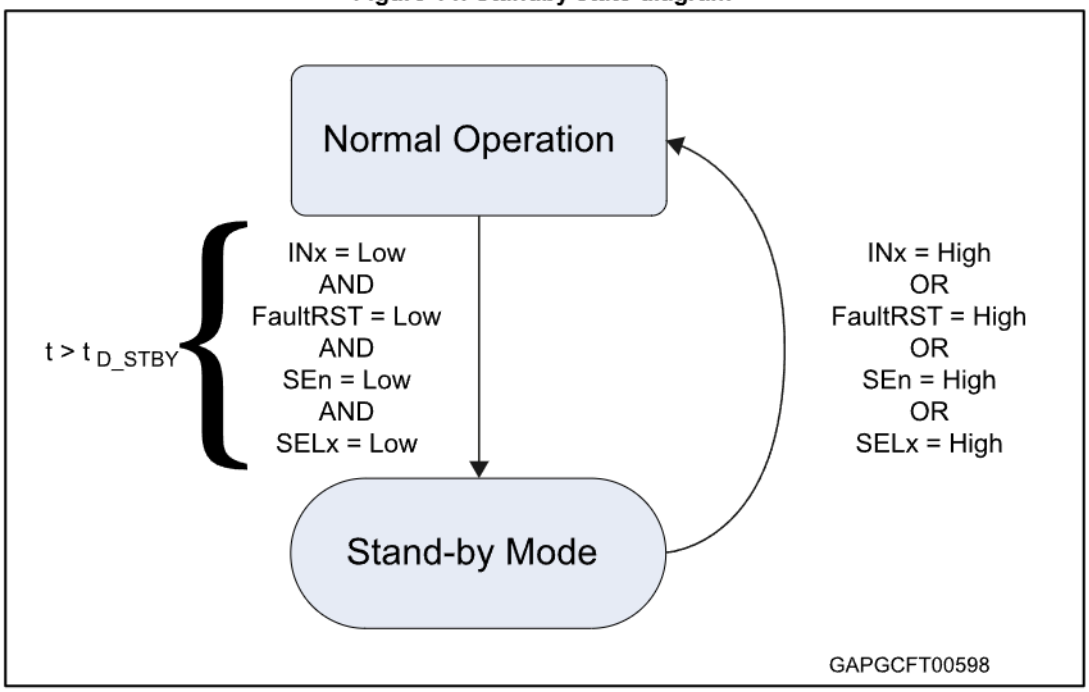

2.5 Electrical characteristics curves

Figure 15: OFF-state output current

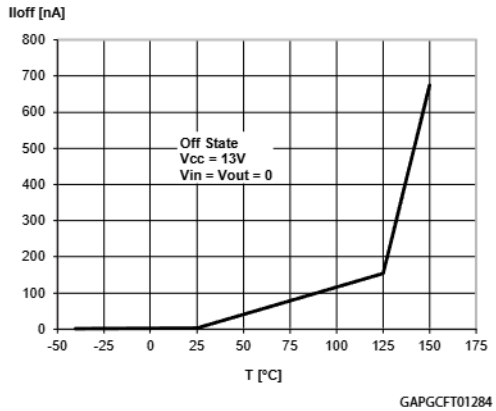

Figure 16: Standby current

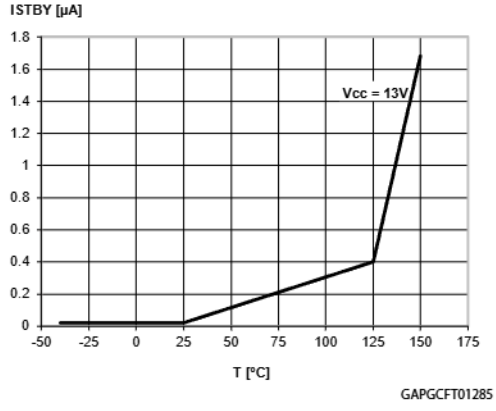

Figure 17: IGND(ON) vs. Iout

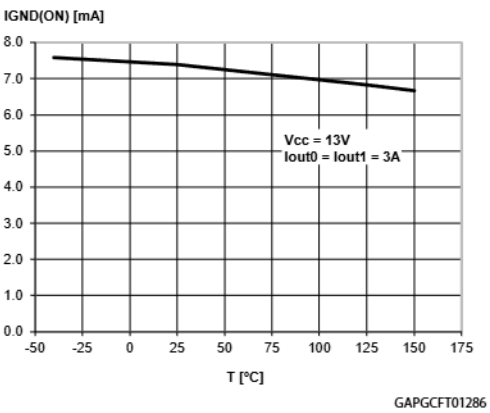

Figure 18: Logic Input high level voltage

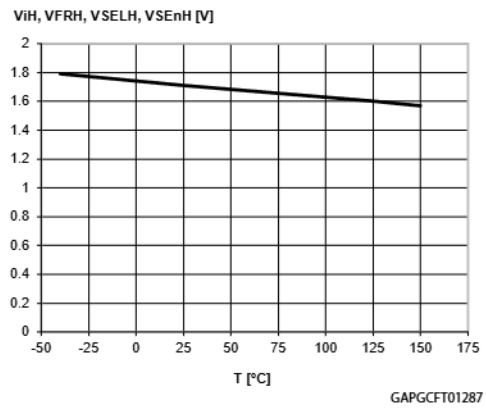

Figure 19: Logic Input low level voltage

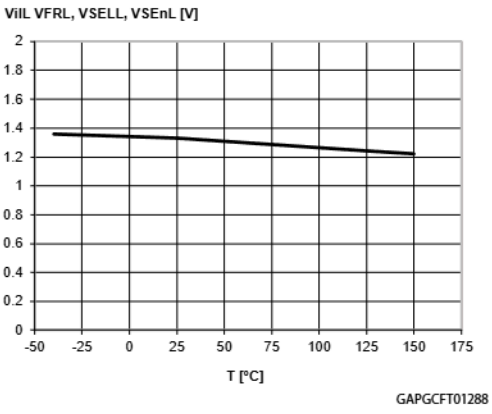

Figure 20: High level logic input current

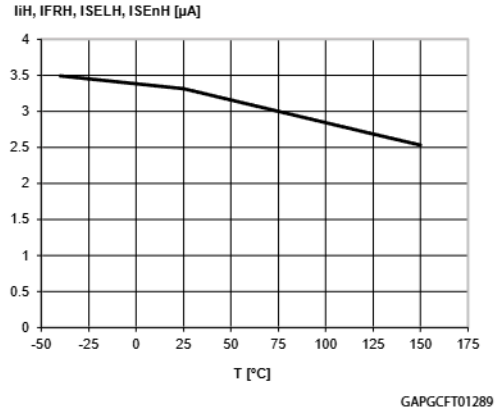

Figure 21: Low level logic input current

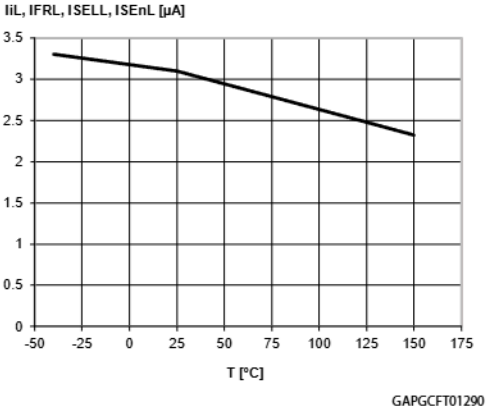

Figure 22: Logic Input hysteresis voltage

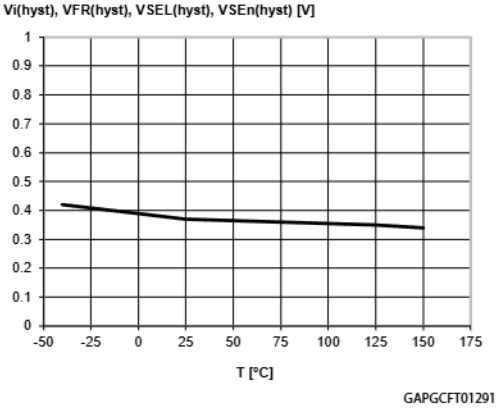

Figure 23: FaultRST Input clamp voltage

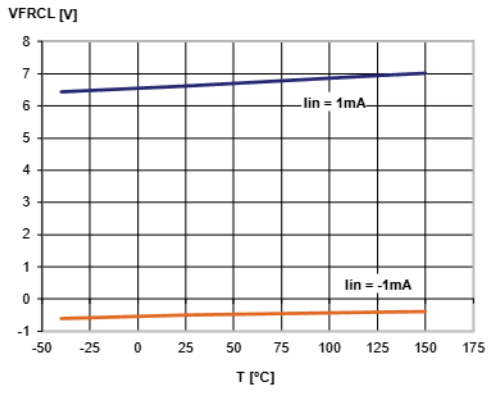

Figure 24: Undervoltage shutdown

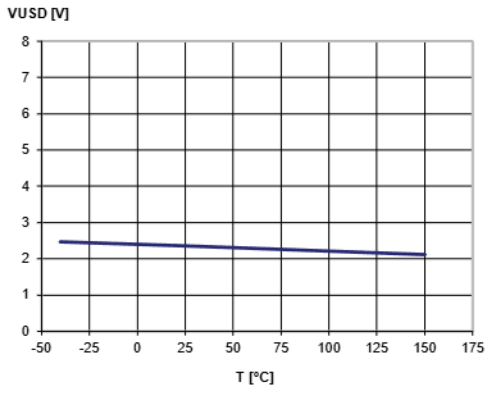

Figure 25: On-state resistance vs. Tcase

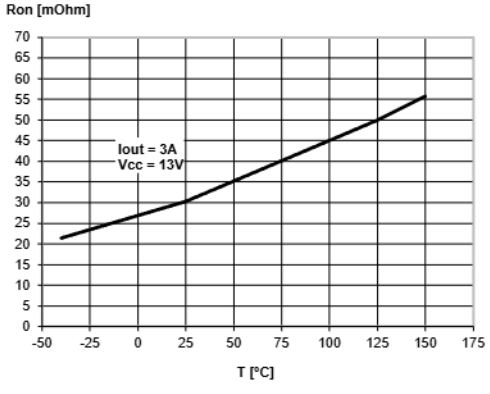

Figure 26: On-state resistance vs. VCC

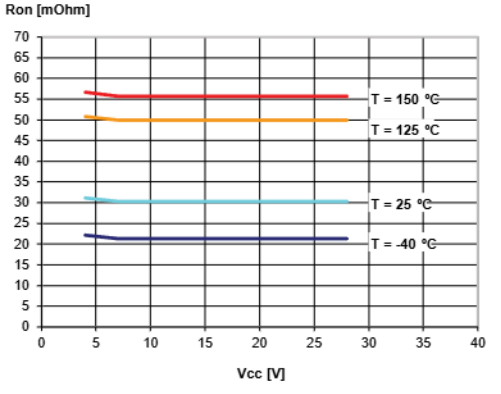

Figure 27: Turn-on voltage slope

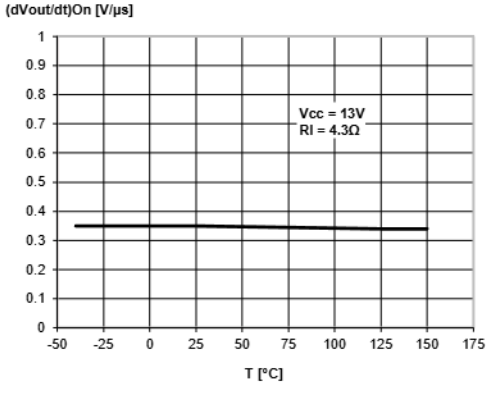

Figure 28: Turn-off voltage slope

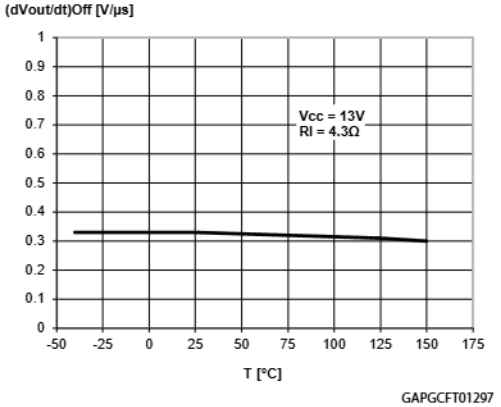

Figure 29: Won vs. Tcase

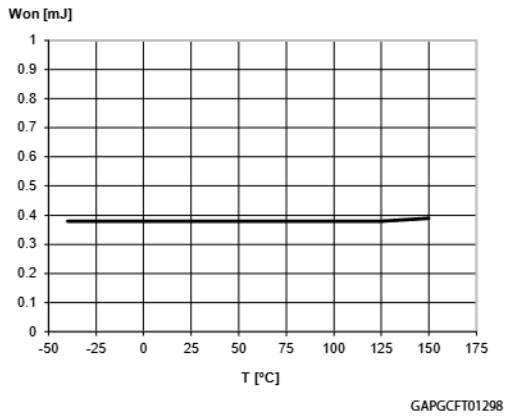

Figure 30: Woff vs. Tcase

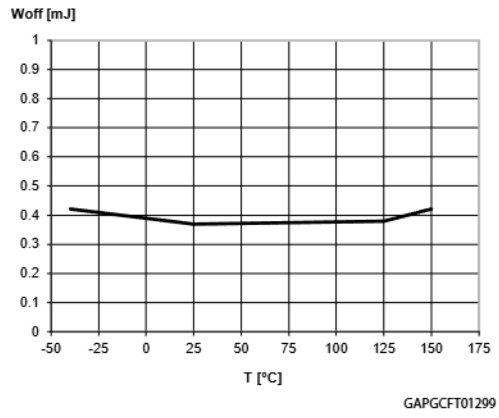

Figure 31: ILIMH vs. Tcase

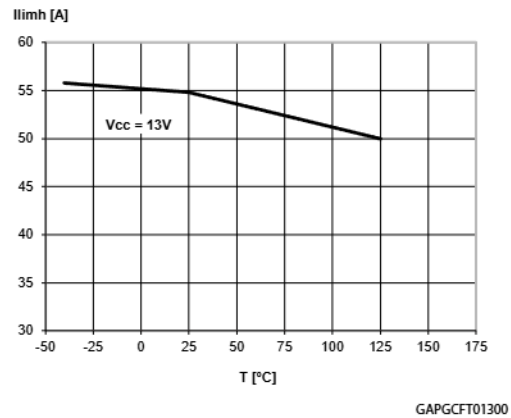

Figure 32: OFF-state open-load voltage detection threshold

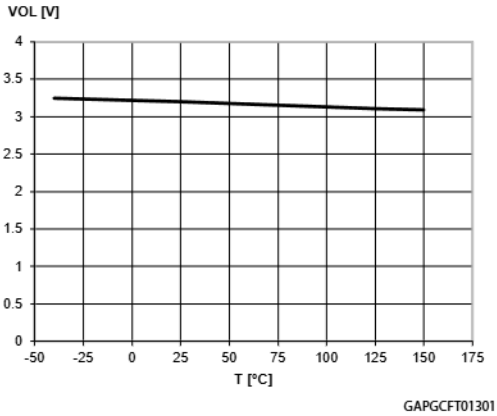

Figure 33: Vsense clamp vs. Tcase

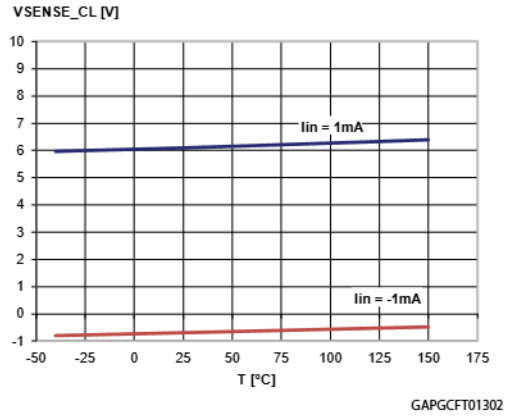

Figure 34: Vsenseh vs. Tcase

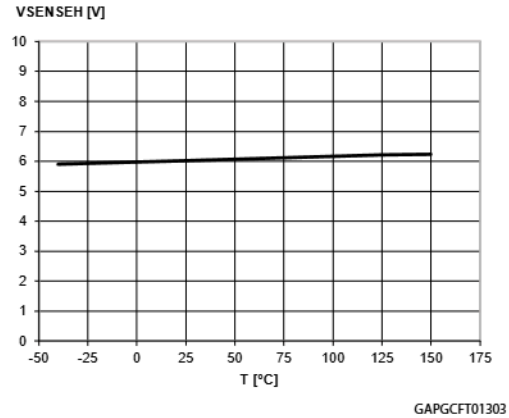

3 Protections

3.1 Power limitation

The basic working principle of this protection consists of an indirect measurement of the junction temperature swing ΔT_j through the direct measurement of the spatial temperature gradient on the device surface in order to automatically shut off the output MOSFET as soon as ΔT_j exceeds the safety level of ΔT_{j_SD}. According to the voltage level on the FaultRST pin, the output MOSFET switches on and cycles with a thermal hysteresis according to the maximum instantaneous power which can be handled (FaultRST = Low) or remains off (FaultRST = High). The protection prevents fast thermal transient effects and, consequently, reduces thermo-mechanical fatigue.

3.2 Thermal shutdown

In case the junction temperature of the device exceeds the maximum allowed threshold (typically 175°C), it automatically switches off and the diagnostic indication is triggered. According to the voltage level on the FaultRST pin, the device switches on again as soon as its junction temperature drops to T_R (FaultRST = Low) or remains off (FaultRST = High).

3.3 Current limitation

The device is equipped with an output current limiter in order to protect the silicon as well as the other components of the system (e.g. bonding wires, wiring harness, connectors, loads, etc.) from excessive current flow. Consequently, in case of short circuit, overload or during load power-up, the output current is clamped to a safety level, I_{LIMH}, by operating the output power MOSFET in the active region.

3.4 Negative voltage clamp

In case the device drives inductive load, the output voltage reaches a negative value during turn off. A negative voltage clamp structure limits the maximum negative voltage to a certain value, V_{DEMAG}, allowing the inductor energy to be dissipated without damaging the device.

4 Application information

Figure 35: Application diagram

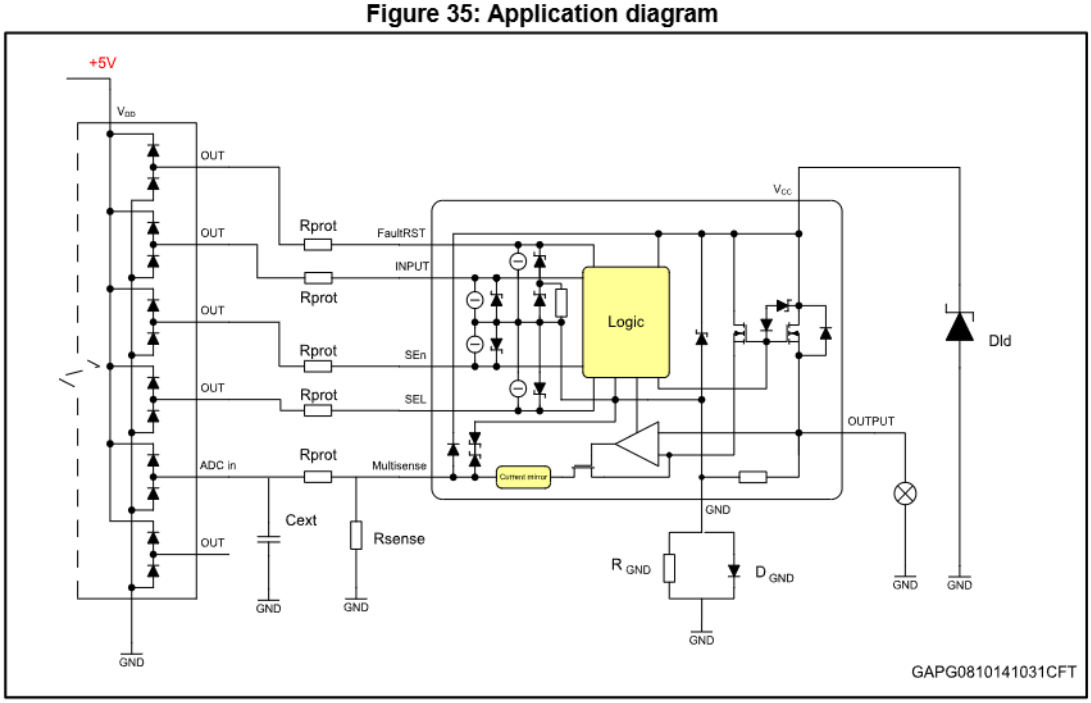

4.1 GND protection network against reverse battery

Figure 36: Simplified internal structure

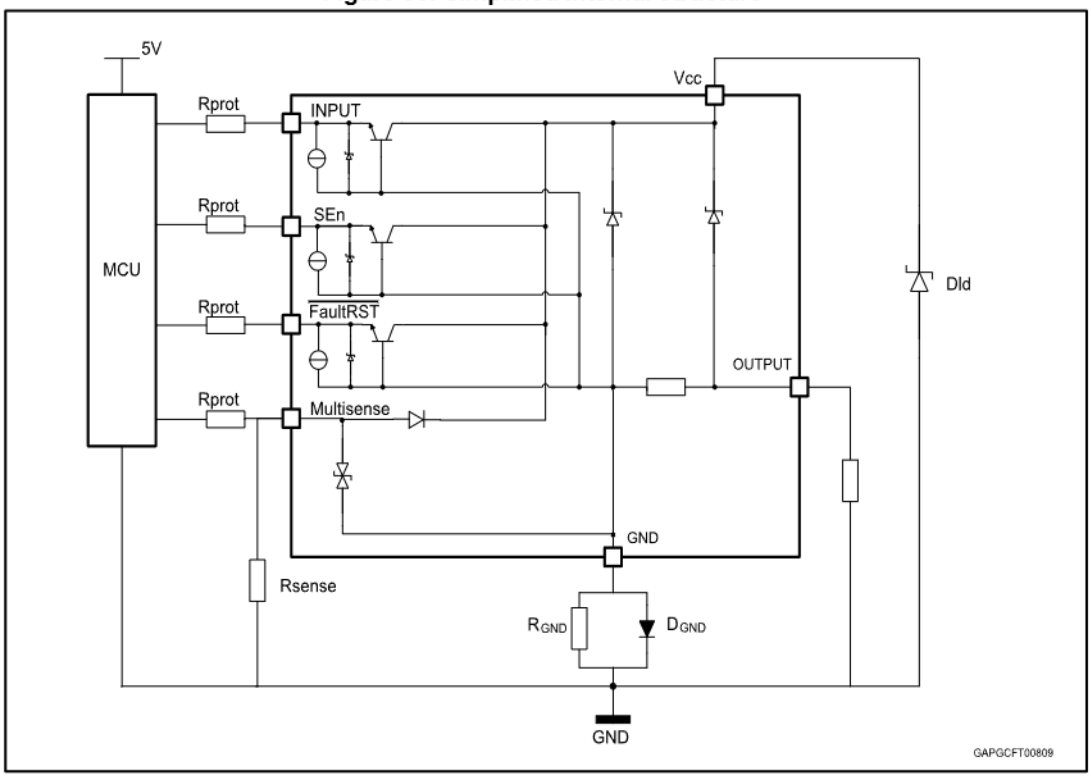

4.1.1 Diode (DGND) in the ground line

A resistor (typ. R_{GND} = 4.7 kΩ) should be inserted in parallel to D_{GND} if the device drives an inductive load.

This small signal diode can be safely shared amongst several different HSDs. Also in this case, the presence of the ground network produces a shift (≈600 mV) in the input threshold and in the status output values if the microprocessor ground is not common to the device ground. This shift does not vary if more than one HSD shares the same diode/resistor network.

4.2 Immunity against transient electrical disturbances

The immunity of the device against transient electrical emissions, conducted along the supply lines and injected into the V_{CC} pin, is tested in accordance with ISO7637-2:2011 (E) and ISO 16750-2:2010.

The related function performance status classification is shown in *Table 12: "ISO 7637-2 - electrical transient conduction along supply line"*.

Test pulses are applied directly to DUT (Device Under Test) both in ON and OFF-state and in accordance to ISO 7637-2:2011(E), chapter 4. The DUT is intended as the present device only, without components and accessed through V_{CC} and GND terminals.

Status II is defined in ISO 7637-1 Function Performance Status Classification (FPSC) as follows: “The function does not perform as designed during the test but returns automatically to normal operation after the test”.

Table 12: ISO 7637-2 - electrical transient conduction along supply line

Test Pulse 2011(E)	Test pulse severity level with Status II functional performance status		Minimum number of pulses or test time	Burst cycle / pulse repetition time		Pulse duration and pulse generator internal impedance
	Level	U_S (1)		min	max	
1	III	-112V	500 pulses	0,5 s		2ms, 10Ω
2a	III	+55V	500 pulses	0,2 s	5 s	50µs, 2Ω
3a	IV	-220V	1h	90 ms	100 ms	0.1µs, 50Ω
3b	IV	+150V	1h	90 ms	100 ms	0.1µs, 50Ω
4 (2)	IV	-7V	1 pulse			100ms, 0.01Ω
Load dump according to ISO 16750-2:2010						
Test B (3)		40V	5 pulse	1 min		400ms, 2Ω

Notes:

(1)U_S is the peak amplitude as defined for each test pulse in ISO 7637-2:2011(E), chapter 5.6.

(2)Test pulse from ISO 7637-2:2004(E).

(3)With 40 V external suppressor referred to ground (-40°C < T_j < 150°C).

4.3 MCU I/Os protection

If a ground protection network is used and negative transients are present on the V_{CC} line, the control pins will be pulled negative. ST suggests to insert a resistor (R_{prot}) in line both to prevent the microcontroller I/O pins to latch-up and to protect the HSD inputs.

The value of these resistors is a compromise between the leakage current of microcontroller and the current required by the HSD I/Os (Input levels compatibility) with the latch-up limit of microcontroller I/Os.

Equation

$V_{CCpeak}/I_{latchup} \leq R_{prot} \leq (V_{OH\mu C} - V_{IH} - V_{GND}) / I_{IHmax}$

Calculation example:

For V_{CCpeak} = -150 V; $I_{latchup} \geq$ 20 mA; $V_{OH\mu C} \geq$ 4.5 V

7.5 kΩ ≤ R_{prot} ≤ 140 kΩ.

Recommended values: R_{prot} = 15 kΩ

4.4 Multisense - analog current sense

Diagnostic information on device and load status are provided by an analog output pin (MultiSense) delivering the following signals:

- Current monitor: current mirror of channel output current
- V_{CC} monitor: voltage propotional to V_{CC}
- T_{CASE}: voltage propotional to chip temperature

Those signals are routed through an analog multiplexer which is configured and controlled by means of SELx and SEn pins, according to the address map in *MultiSense multiplexer addressing Table*.

Figure 37: MultiSense and diagnostic – block diagram

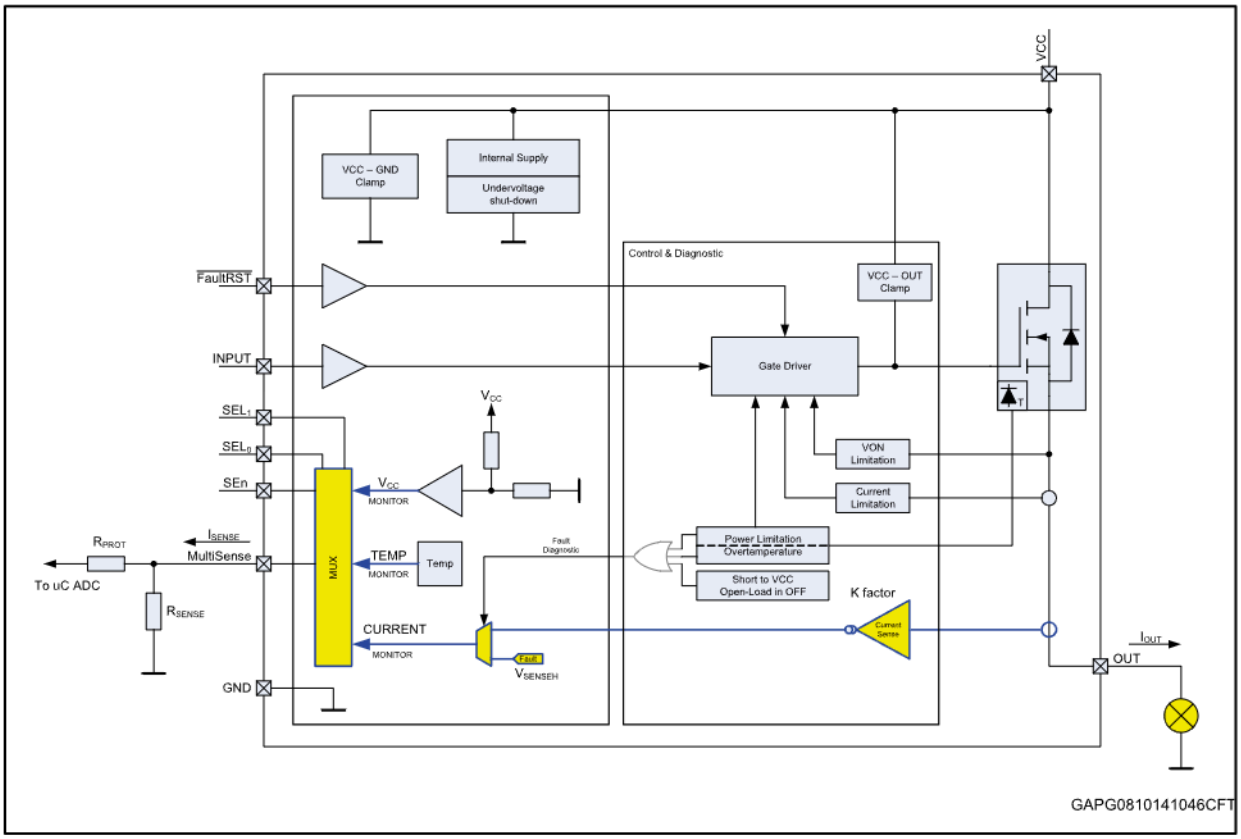

4.4.1 Principle of Multisense signal generation

Figure 38: MultiSense block diagram

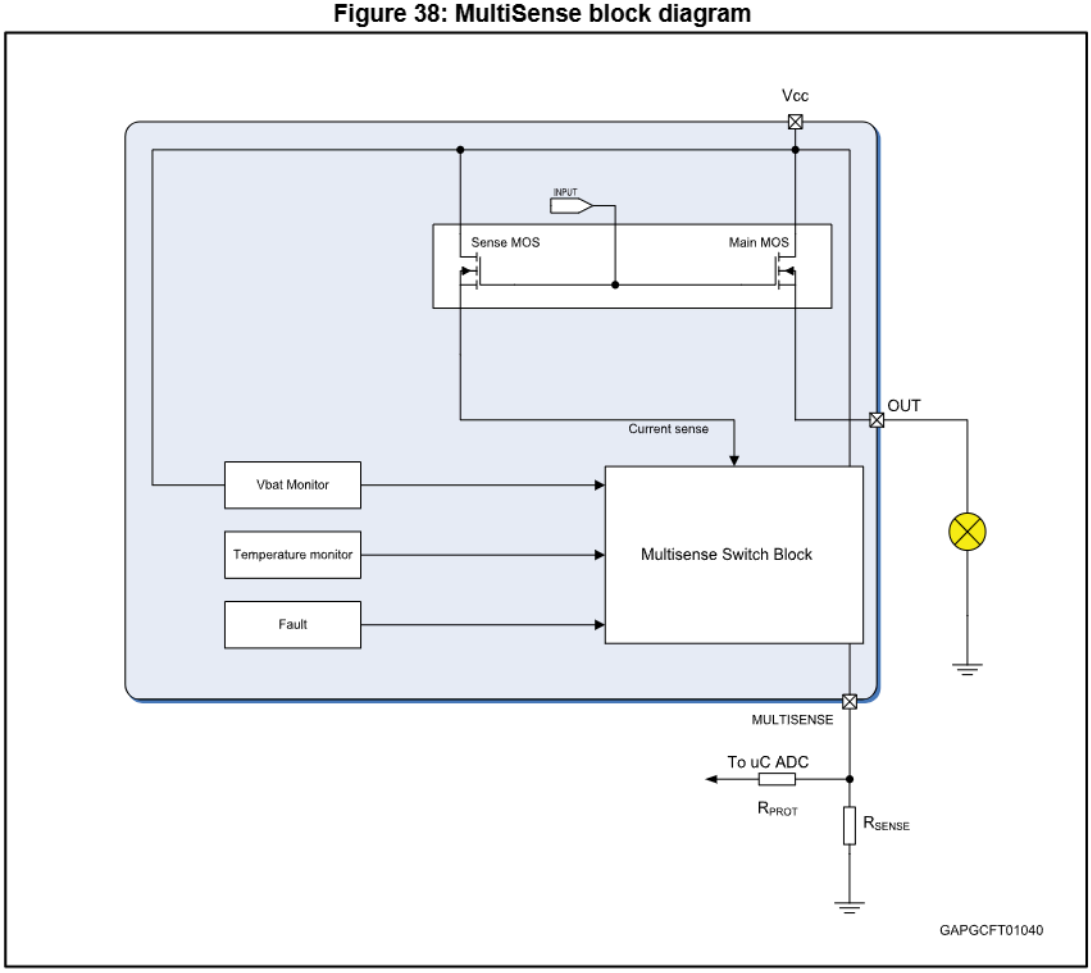

Current monitor

When current mode is selected in the MultiSense, this output is capable to provide:

- Current mirror proportional to the load current in normal operation, delivering current proportional to the load according to known ratio named **K**
- Diagnostics flag in fault conditions delivering fixed voltage V_{SENSEH}

The current delivered by the current sense circuit, I_{SENSE}, can be easily converted to a voltage V_{SENSE} by using an external sense resistor, R_{SENSE}, allowing continuous load monitoring and abnormal condition detection.

Normal operation (channel ON, no fault, SEn active)

While device is operating in normal conditions (no fault intervention), V_{SENSE} calculation can be done using simple equations

Current provided by MultiSense output: $I_{SENSE} = I_{OUT}/K$

Voltage on R_{SENSE}: $V_{SENSE} = R_{SENSE} \cdot I_{SENSE} = R_{SENSE} \cdot I_{OUT}/K$

Where:

- V_{SENSE} is voltage measurable on R_{SENSE} resistor
- I_{SENSE} is current provided from MultiSense pin in current output mode

- I_{OUT} is current flowing through output
- K factor represents the ratio between PowerMOS cells and SenseMOS cells; its spread includes geometric factor spread, current sense amplifier offset and process parameters spread of overall circuitry specifying ratio between I_{OUT} and I_{SENSE}.

Failure flag indication

In case of power limitation/overtemperature, the fault is indicated by the MultiSense pin which is switched to a “current limited” voltage source, V_{SENSEH}.

In any case, the current sourced by the MultiSense in this condition is limited to I_{SENSEH}.

The typical behavior in case of overload or hard short circuit is shown in *Waveforms section*.

Figure 39: Analogue HSD – open-load detection in off-state

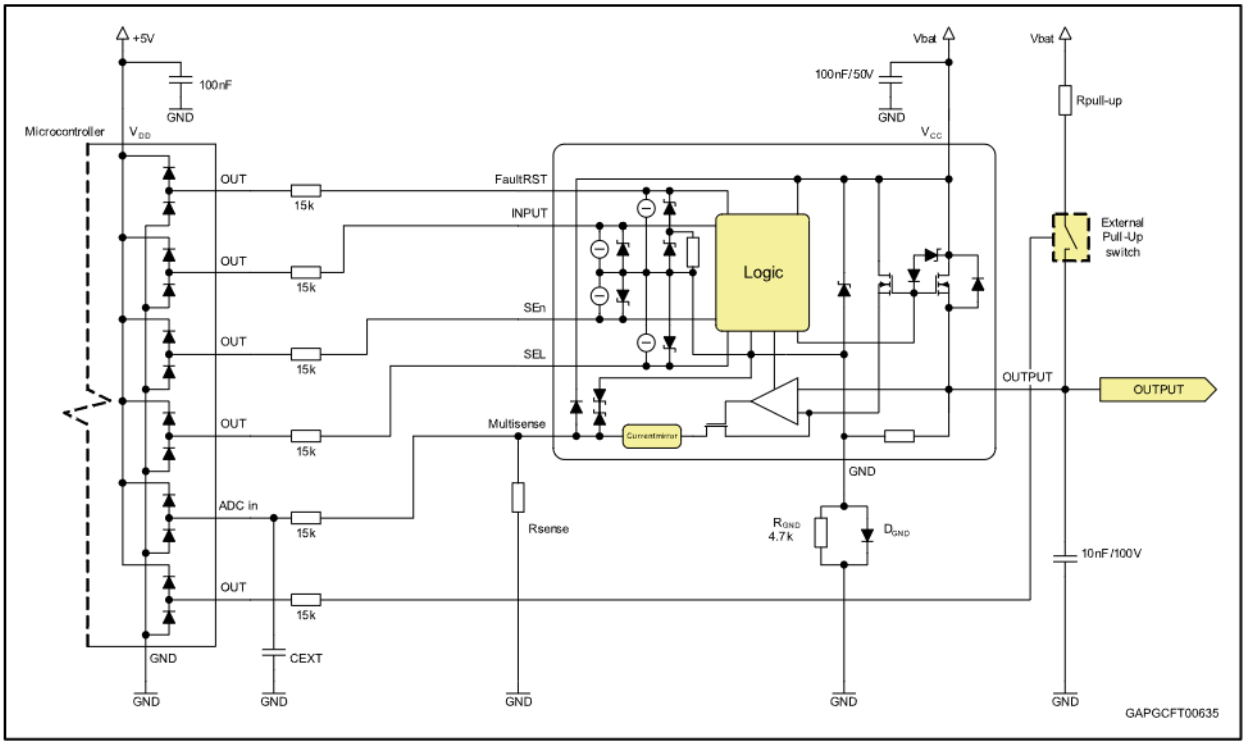

Figure 40: Open-load / short to VCC condition

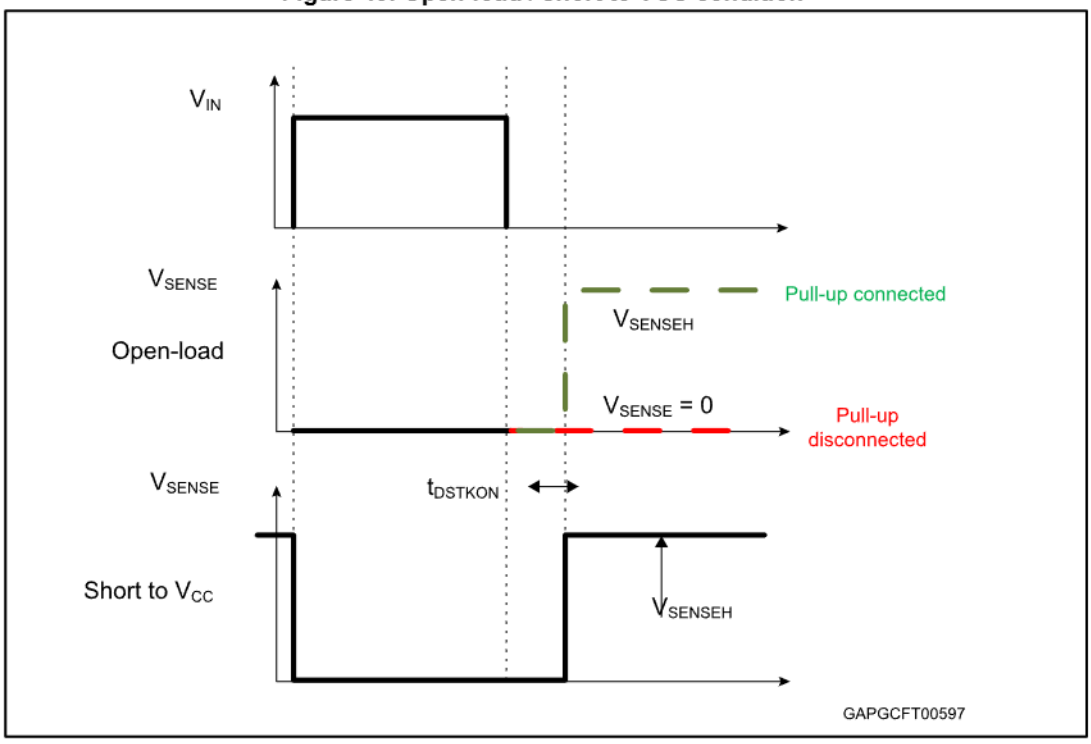

Table 13: MultiSense pin levels in off-state

Condition	Output	MultiSense	SEn
Open-load	$V_{OUT} > V_{OL}$	Hi-Z	L
		V_{SENSEH}	H
	$V_{OUT} < V_{OL}$	Hi-Z	L
		0	H
Short to V_{CC}	$V_{OUT} > V_{OL}$	Hi-Z	L
		V_{SENSEH}	H
Nominal	$V_{OUT} < V_{OL}$	Hi-Z	L
		0	H

4.4.2 TCASE and VCC monitor

In this case, MultiSense output operates in voltage mode and output level is referred to device GND. Care must be taken in case a GND network protection is used, because a voltage shift is generated between device GND and the microcontroller input GND reference.

Figure 41: "GND voltage shift" shows link between $V_{MEASURED}$ and real V_{SENSE} signal.

Figure 41: GND voltage shift

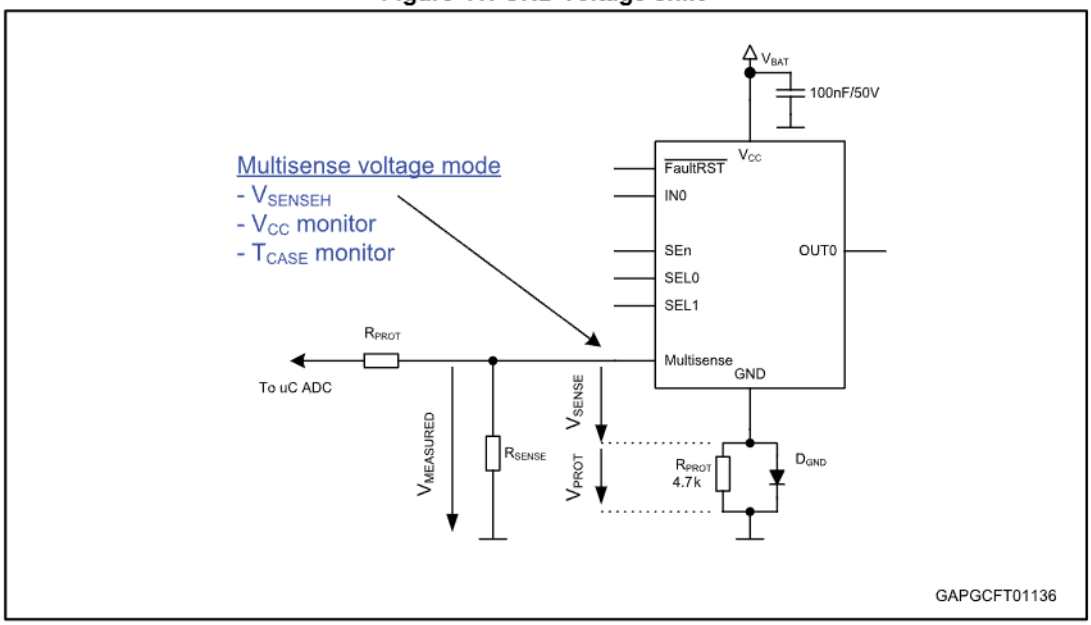

V_{CC} monitor

Battery monitoring channel provides $V_{SENSE} = V_{CC} / 4$.

Case temperature monitor

Case temperature monitor is capable to provide information about the actual device temperature. Since a diode is used for temperature sensing, the following equation describes the link between temperature and output V_{SENSE} level:

$V_{SENSE_TC}(T) = V_{SENSE_TC}(T_0) + dV_{SENSE_TC} / dT * (T - T_0)$

where dV_{SENSE_TC} / dT ~ typically -5.5 mV/K (for temperature range (-40 °C to 150 °C).

4.4.3 Short to VCC and OFF-state open-load detection

Short to V_{CC}

A short circuit between V_{CC} and output is indicated by the relevant current sense pin set to V_{SENSEH} during the device off-state. Small or no current is delivered by the current sense during the on-state depending on the nature of the short circuit.

OFF-state open-load with external circuitry

Detection of an open-load in off mode requires an external pull-up resistor R_{PU} connecting the output to a positive supply voltage V_{PU}.

It is preferable V_{PU} to be switched off during the module standby mode in order to avoid the overall standby current consumption to increase in normal conditions, i.e. when load is connected.

R_{PU} must be selected in order to ensure $V_{OUT} > V_{OLmax}$ in accordance with the following equation:

Equation

$$R_{PU} < \frac{V_{PU} - 4}{I_{L(off2)min\ @\ 4V}}$$

5 Maximum demagnetization energy (VCC = 16 V)

Figure 42: Maximum turn off current versus inductance

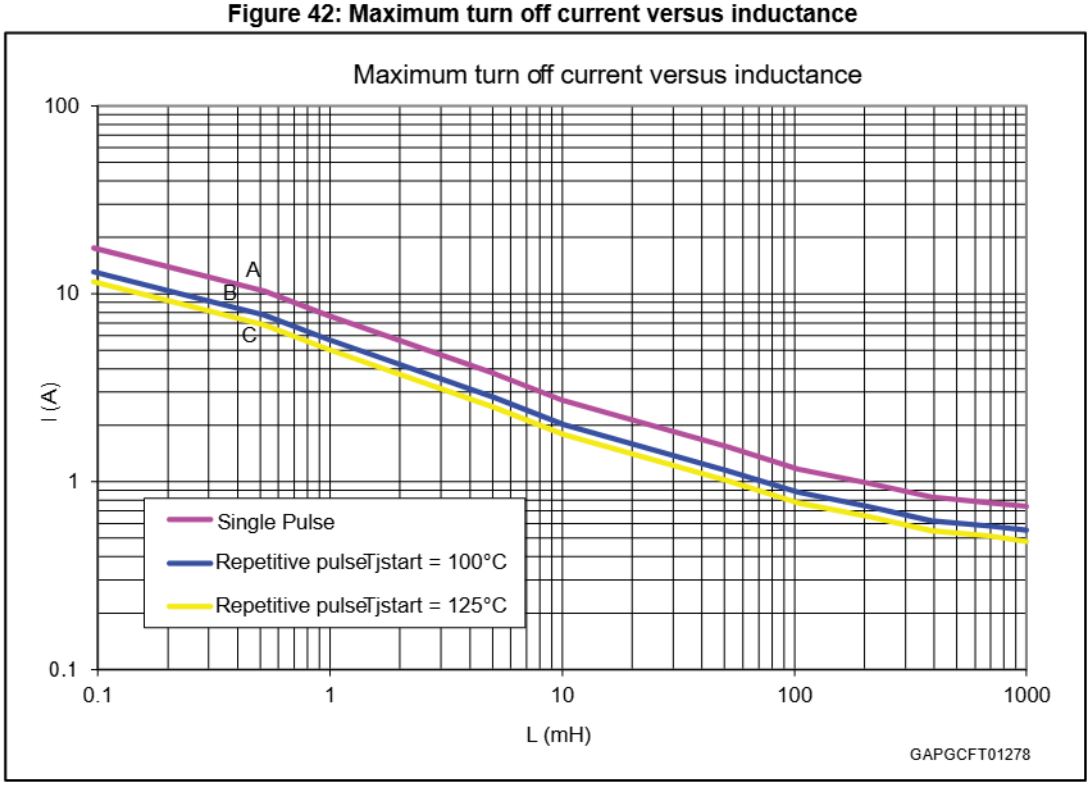

Values are generated with R_L = 0 Ω.

In case of repetitive pulses, T_{jstart} (at the beginning of each demagnetization) of every pulse must not exceed the temperature specified above for curves A and B.

6 Package and PCB thermal data

6.1 PowerSSO-16 thermal data

Figure 43: PowerSSO-16 on two-layers PCB (2s0p to JEDEC JESD 51-5)

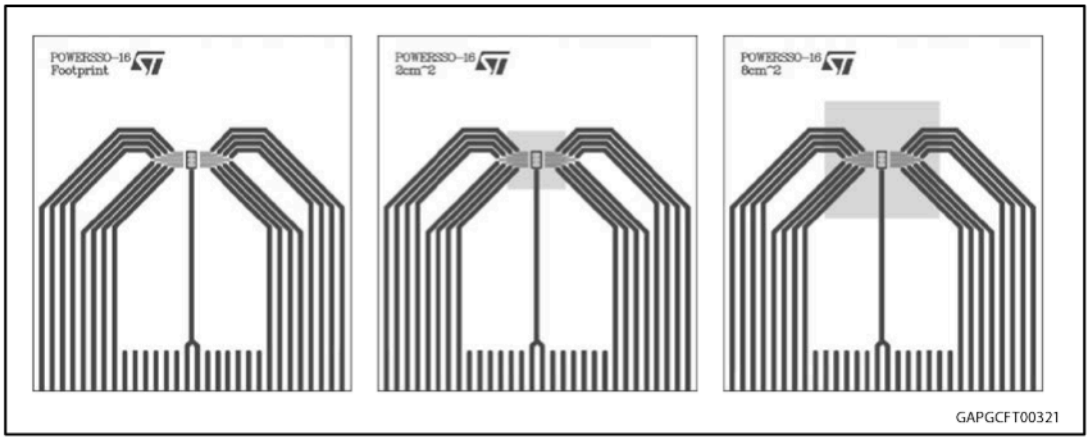

Figure 44: PowerSSO-16 on four-layers PCB (2s2p to JEDEC JESD 51-7)

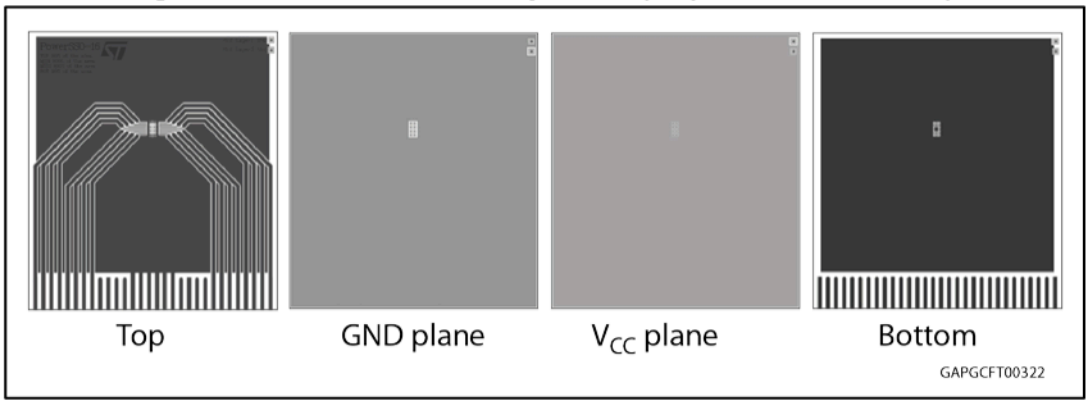

Table 14: PCB properties

Dimension	Value
Board finish thickness	1.6 mm +/- 10%
Board dimension	77 mm x 86 mm
Board Material	FR4
Copper thickness (top and bottom layers)	0.070 mm
Copper thickness (inner layers)	0.035 mm
Thermal vias separation	1.2 mm
Thermal via diameter	0.3 mm +/- 0.08 mm
Copper thickness on vias	0.025 mm
Footprint dimension (top layer)	2.2 mm x 3.9 mm
Heatsink copper area dimension (bottom layer)	Footprint, 2 cm^2 or 8 cm^2

Figure 45: Rthj-amb vs PCB copper area in open box free air condition (one channel on)

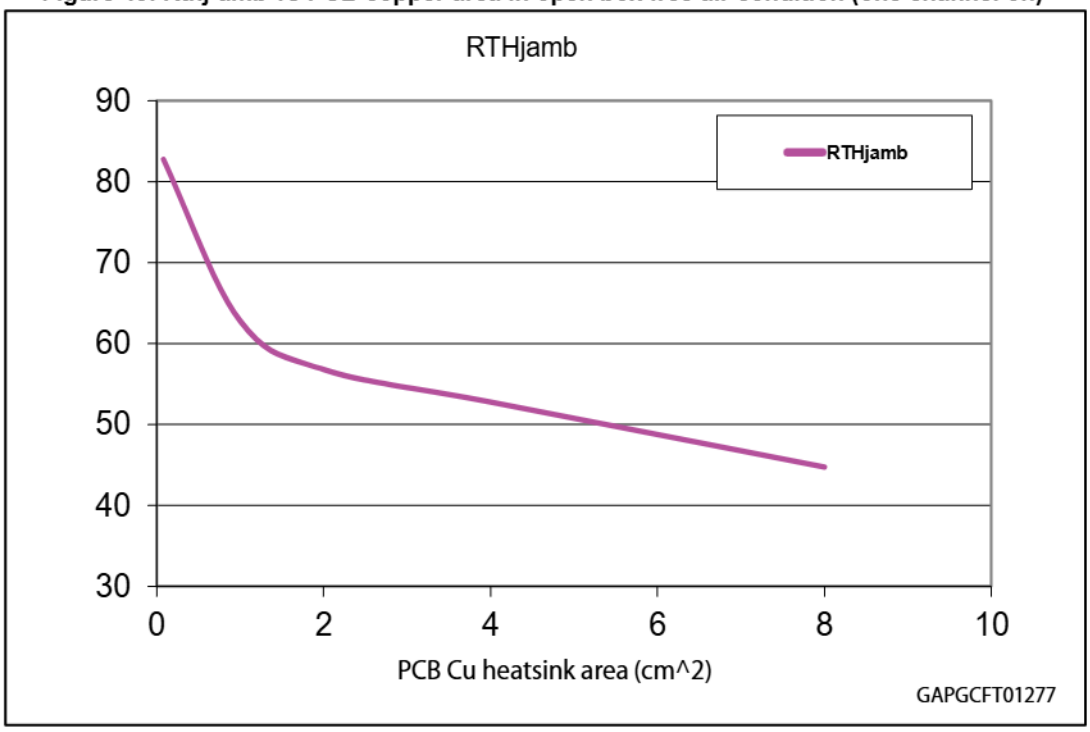

Figure 46: PowerSSO-16 thermal impedance junction ambient single pulse (one channel on)

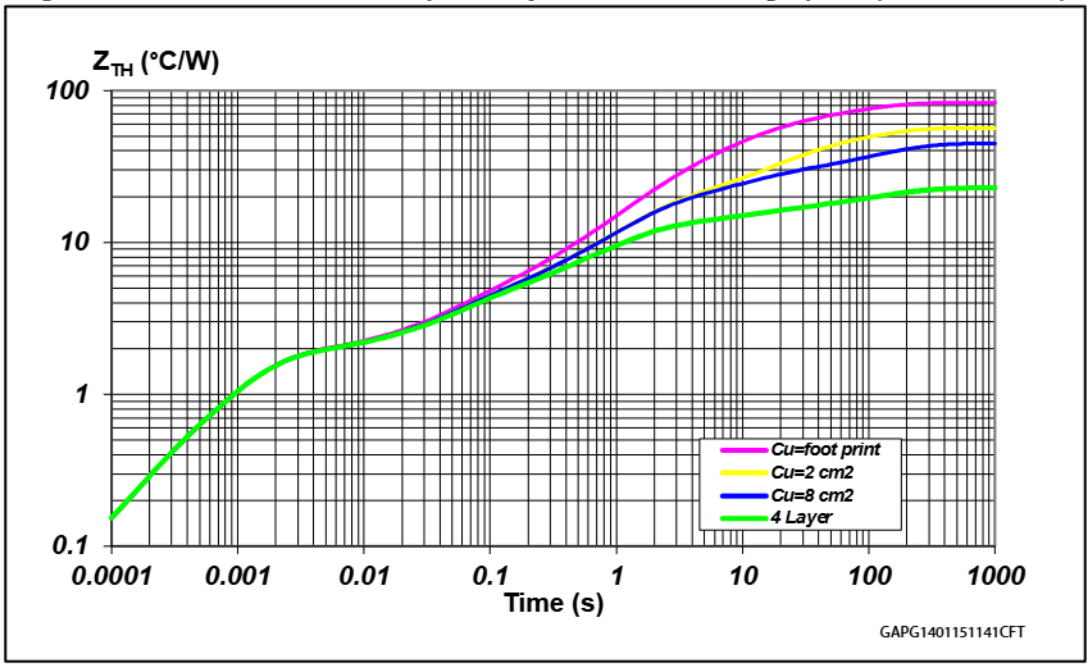

Equation: pulse calculation formula

$Z_{THδ} = R_{TH} \cdot δ + Z_{THtp} (1 - δ)$

where $δ = t_P/T$

Figure 47: Thermal fitting model of a double-channel HSD in PowerSSO-16

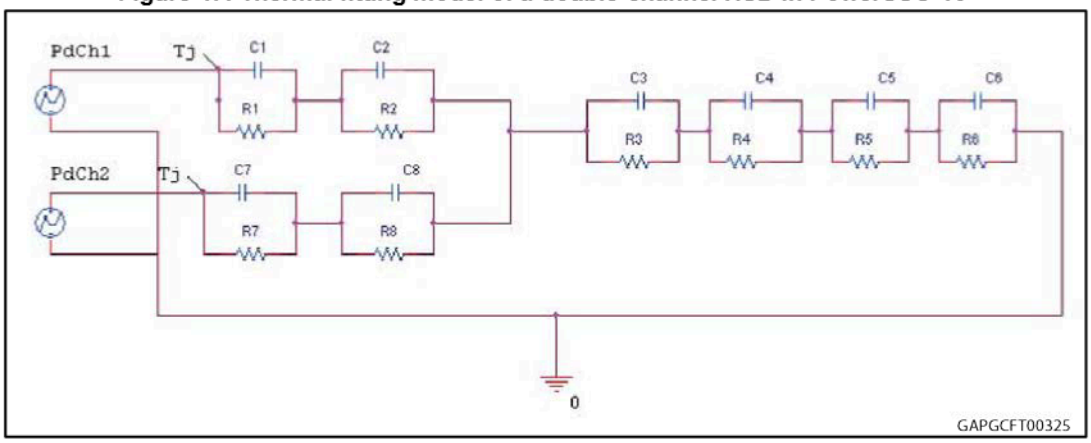

The fitting model is a simplified thermal tool and is valid for transient evolutions where the embedded protections (power limitation or thermal cycling during thermal shutdown) are not triggered.

Table 15: Thermal parameters

Area/island (cm^2)	Footprint	2	8	4L
R1 = R7 (°C/W)	1.8			
R2 = R8 (°C/W)	2			
R3 (°C/W)	7	7	7	5
R4 (°C/W)	16	6	6	4
R5 (°C/W)	30	20	10	3
R6 (°C/W)	26	20	18	7
C1 = C7 (W.s/°C)	0.00065			
C2 = C8 (W.s/°C)	0.03			
C3 (W.s/°C)	0.15			
C4 (W.s/°C)	0.2	0.3	0.3	0.4
C5 (W.s/°C)	0.4	1	1	4
C6 (W.s/°C)	3	5	7	18

7 Package information

In order to meet environmental requirements, ST offers these devices in different grades of ECOPACK® packages, depending on their level of environmental compliance. ECOPACK® specifications, grade definitions and product status are available at: ***www.st.com***. ECOPACK® is an ST trademark.

7.1 PowerSSO-16 package information

Figure 48: PowerSSO-16 package dimensions

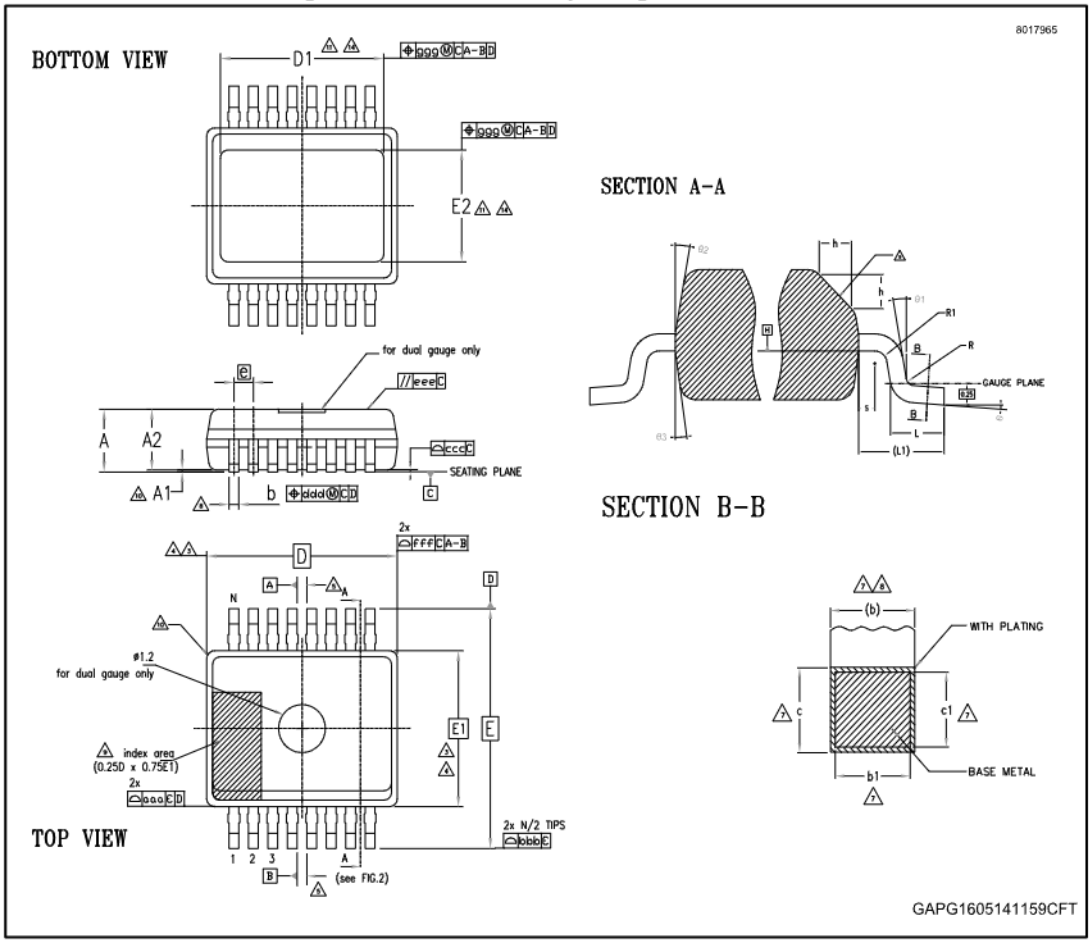

Table 16: PowerSSO-16 mechanical data

Symbol	Millimeters		
	Min.	Typ.	Max.
Θ	0°		8°
Θ1	0°		
Θ2	5°		15°
Θ3	5°		15°
A			1.70
A1	0.00		0.10
A2	1.10		1.60

Symbol	Millimeters		
	Min.	Typ.	Max.
b	0.20		0.30
b1	0.20	0.25	0.28
c	0.19		0.25
c1	0.19	0.20	0.23
D		4.9 BSC	
D1	3.60		4.20
e		0.50 BSC	
E		6.00 BSC	
E1		3.90 BSC	
E2	1.90		2.50
h	0.25		0.50
L	0.40	0.60	0.85
L1		1.00 REF	
N		16	
R	0.07		
R1	0.07		
S	0.20		
Tolerance of form and position			
aaa		0.10	
bbb		0.10	
ccc		0.08	
ddd		0.08	
eee		0.10	
fff		0.10	
ggg		0.15	

7.2 PowerSSO-16 packing information

Figure 49: PowerSSO-16 reel 13"

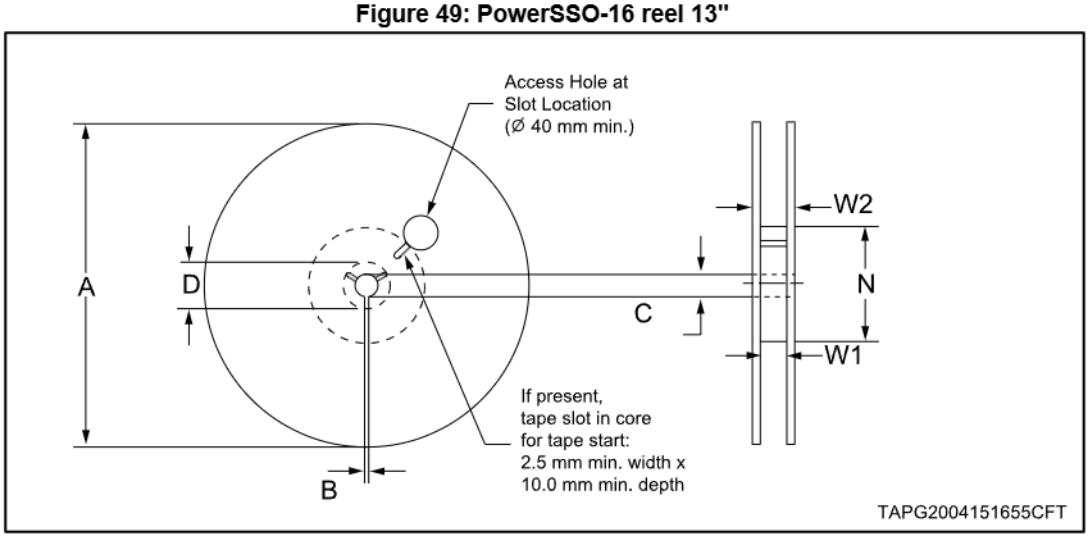

Table 17: Reel dimensions

Description	Value[1]
Base quantity	2500
Bulk quantity	2500
A (max)	330
B (min)	1.5
C (+0.5, -0.2)	13
D (min)	20.2
N	100
W1 (+2 /-0)	12.4
W2 (max)	18.4

Notes:

(1)All dimensions are in mm.

Figure 50: PowerSSO-16 carrier tape

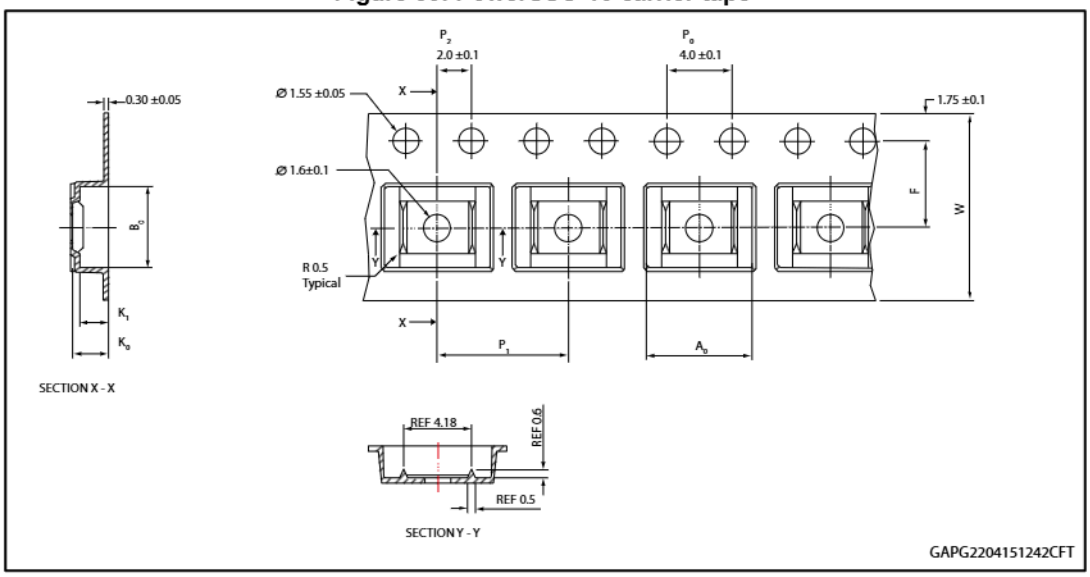

Table 18: PowerSSO-16 carrier tape dimensions

Description	Value[(1)]
A_0	6.50 ± 0.1
B_0	5.25 ± 0.1
K_0	2.10 ± 0.1
K_1	1.80 ± 0.1
F	5.50 ± 0.1
P_1	8.00 ± 0.1
W	12.00 ± 0.3

Notes:

(1)All dimensions are in mm.

Figure 51: PowerSSO-16 schematic drawing of leader and trailer tape

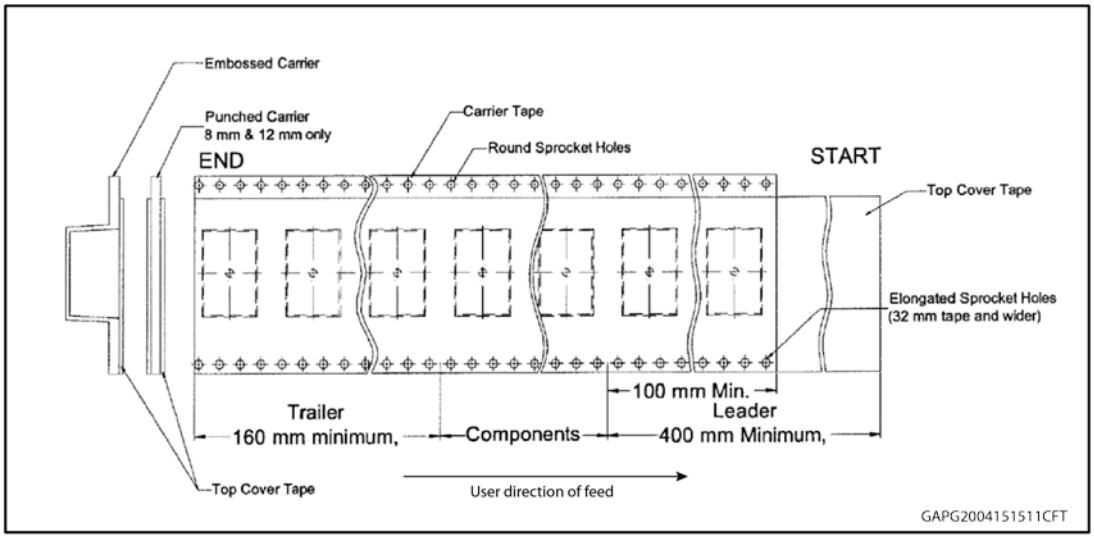

7.3 PowerSSO-16 marking information

Figure 52: PowerSSO-16 marking information

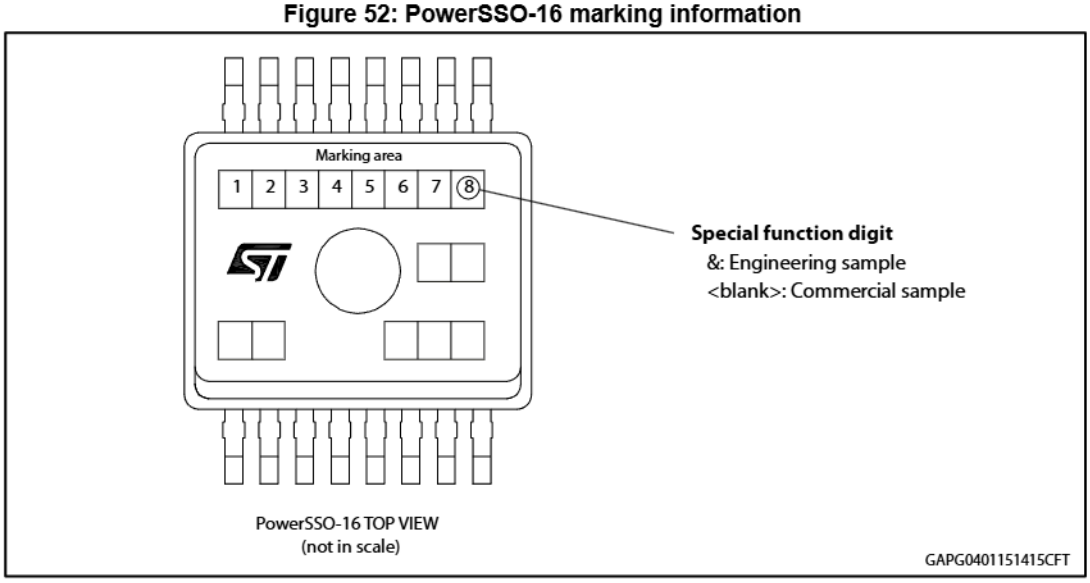

Engineering Samples: these samples can be clearly identified by a dedicated special symbol in the marking of each unit. These samples are intended to be used for electrical compatibility evaluation only; usage for any other purpose may be agreed only upon written authorization by ST. ST is not liable for any customer usage in production and/or in reliability qualification trials.

Commercial Samples: fully qualified parts from ST standard production with no usage restrictions.

8 Order codes

Table 19: Device summary

Package	Order codes
	Tape and reel
PowerSSO-16	VND7030AJTR

9 Revision history

Table 20: Document revision history

Date	Revision	Changes
25-May-2015	1	Initial release.

IMPORTANT NOTICE – PLEASE READ CAREFULLY

STMicroelectronics NV and its subsidiaries (“ST”) reserve the right to make changes, corrections, enhancements, modifications, and improvements to ST products and/or to this document at any time without notice. Purchasers should obtain the latest relevant information on ST products before placing orders. ST products are sold pursuant to ST’s terms and conditions of sale in place at the time of order acknowledgement.

Purchasers are solely responsible for the choice, selection, and use of ST products and ST assumes no liability for application assistance or the design of Purchasers’ products.

No license, express or implied, to any intellectual property right is granted by ST herein.

Resale of ST products with provisions different from the information set forth herein shall void any warranty granted by ST for such product.

ST and the ST logo are trademarks of ST. All other product or service names are the property of their respective owners.

Information in this document supersedes and replaces information previously supplied in any prior versions of this document.

© 2015 STMicroelectronics – All rights reserved